Booklet available in English on
Heft in deutscher Sprache erhältlich auf
Livret disponible en français sur
Libretto disponibile in italiano su
Folleto en español disponible en
如需中文版手册，请访问

FR

DONNEZ OU RECYCLEZ

ASSOCIATION OU MAGASIN OU DÉCHÈTERIE

Adresses sur quefairedemesdechets.fr

LEGO.com/sustainable-packaging

LEGO® VIP

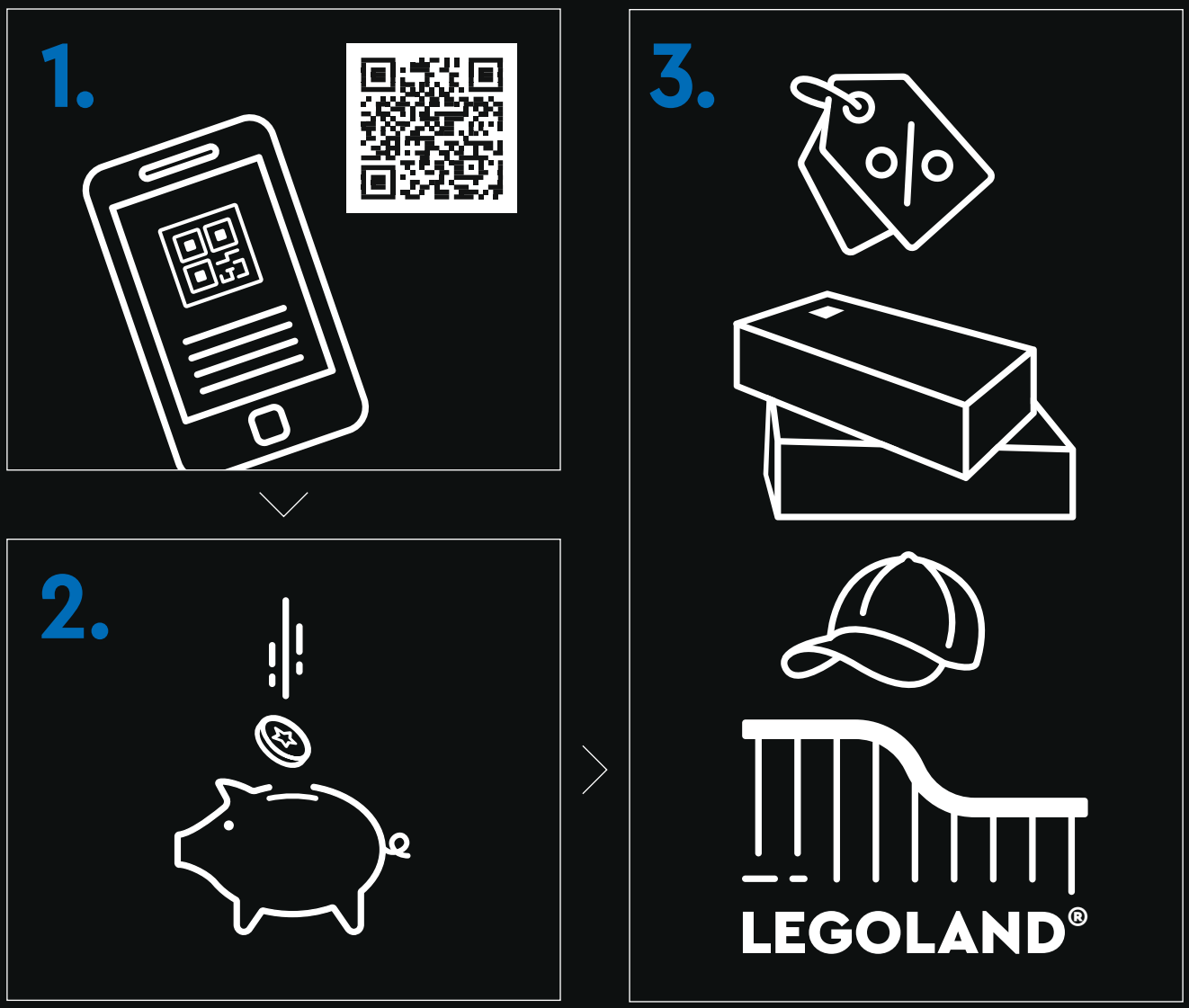

1. Sign up **2.** Earn points for purchases **3.** Redeem points for rewards, experiences, discounts & more | **1.** Melde dich an **2.** Sammle Punkte bei jedem Kauf **3.** Löse die Punkte für Belohnungen, Erlebnisse, Rabatte und Ähnliches ein | **1.** Inscrivez-vous **2.** Gagnez des points lors de vos achats **3.** Échangez vos points contre des récompenses, des expériences, des remises et bien plus encore | **1.** Iscriviti **2.** Guadagna punti con i tuoi acquisti **3.** Riscatta punti per premi, esperienze, sconti e altro ancora | **1.** Regístrate **2.** Gana puntos por tus compras **3.** Canjea puntos por recompensas, experiencias, descuentos y mucho más | **1.** Registe-se **2.** Ganhe pontos em compras **3.** Troque os pontos para prémios, experiências, descontos e muito mais | **1.** 注册 **2.** 购物赚积分 **3.** 用积分兑换奖励、体验、折扣等 | **1.** Zarejestruj się **2.** Zdobywaj punkty za zakupy **3.** Wymieniaj punkty na rabaty, przygody i inne nagrody | **1.** Zaregistrujte se **2.** Sbírejte body za nákupy **3.** Vyměňujte body za odměny, zážitky, slevy a spoustu dalšího | **1.** Zaregistrujte sa **2.** Získavajte body za nákupy **3.** Uplatnite si body a získajte odmeny, rôzne zážitky, zľavy a ešte viac | **1.** Regisztrálj **2.** Szerezz pontokat minden vásárlással **3.** Váltsd be pontjaidat jutalmakra, élményekre, kedvezményekre és egyebekre | **1.** Înscrie-te **2.** Câștigă puncte pentru achiziții **3.** Valorifică puncte pentru recompense, experiențe, reduceri și multe altele | **1.** Регистрирайте се **2.** Получавайте точки за покупки **3.** Използвайте точките за награди, услуги, отстъпки и т.н. | **1.** Reģistrējies **2.** Pelni punktus par pirkumiem **3.** Izmanto punktus, lai saņemtu balvas, izklaides iespējas, atlaides un daudz ko citu | **1.** Registreeru **2.** Teeni ostude eest punkte **3.** Lunasta punktide eest preemiad, elamused, allahindlused ja muu | **1.** Užsiregistruokite **2.** Pelnykite taškų už pirkinius **3.** Panaudokite taškus atlygiui, funkcijoms, nuolaidoms ir ne tik

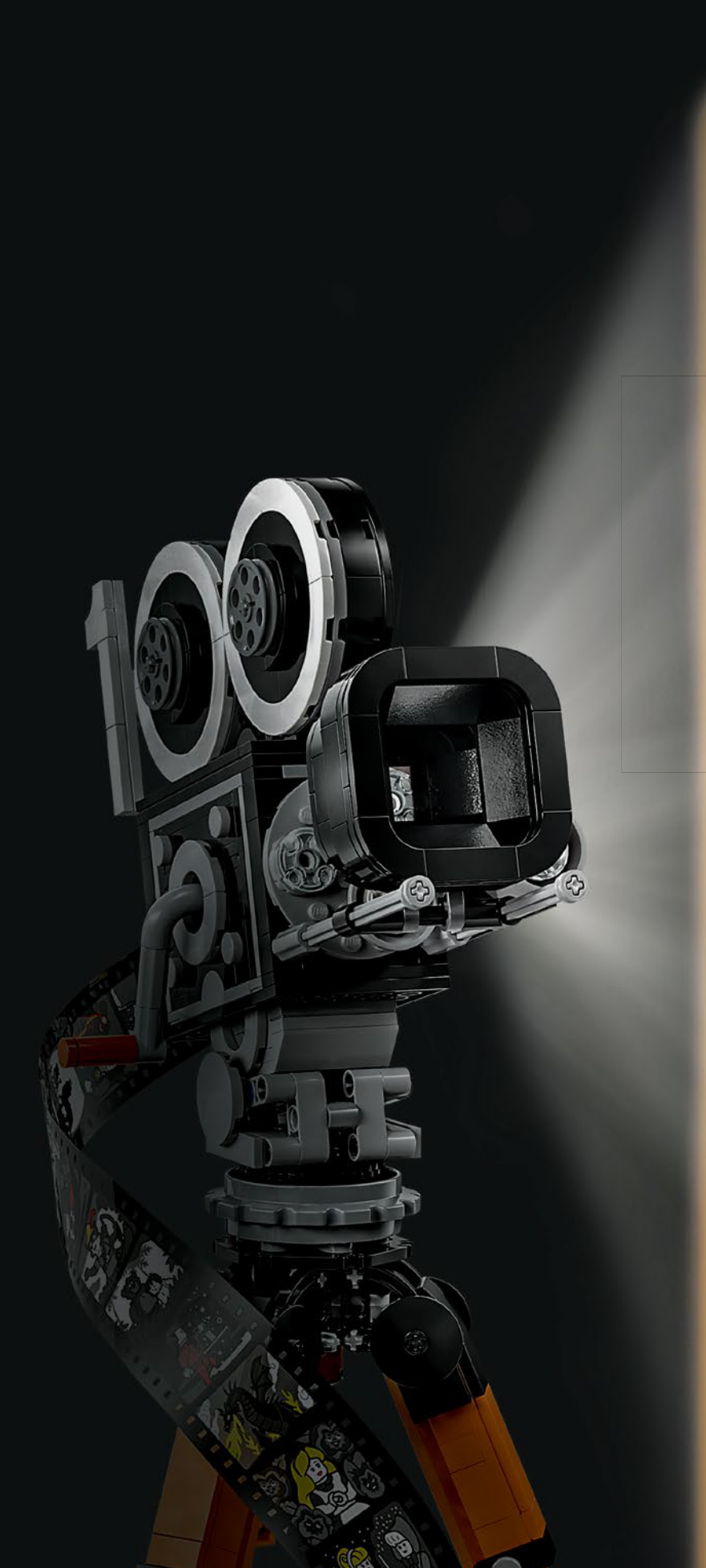

Lights, camera, imagination

Since the Walt Disney Studios were founded in 1923, the name has been synonymous with spellbinding stories and ground-breaking animated films. From *Steamboat Willie* to *Encanto* and beyond, Disney's characters and technological inventions continue to spark joy, awe and imagination in fans of all ages. Enjoy building, as we pay tribute to Walt Disney, his legacy in film history and the innovations that made his dreams come true.

Recreating the magic

Inspired by 1920s-style movie cameras, we incorporated distinct details that help bring the Disney film magic to life.

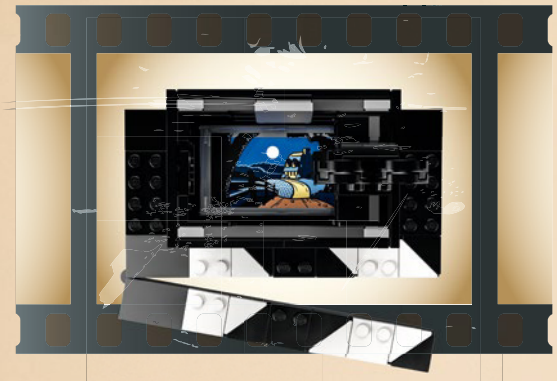

See how Disney's cutting-edge multiplane camera worked

Turn the crank to hear the sound of film recording

Slide the matte box back and forth

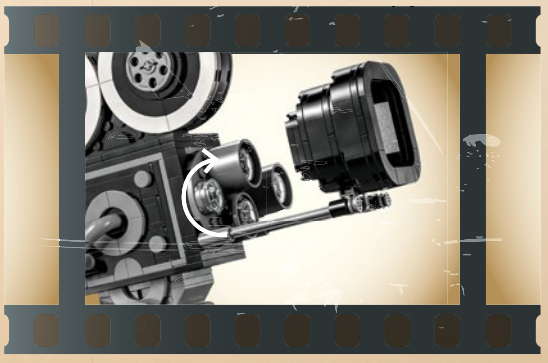

Rotate the disc to switch between the three lenses

Films that move us

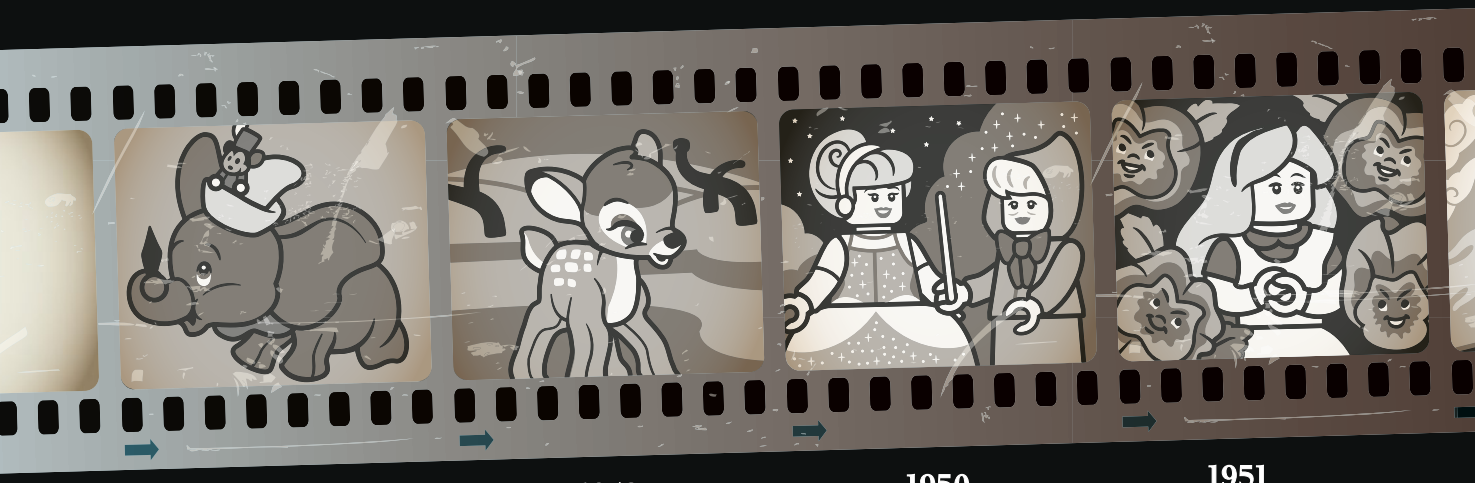

1941
Dumbo

1942
Bambi

1950
Cinderella

1951
Alice in Wonderland

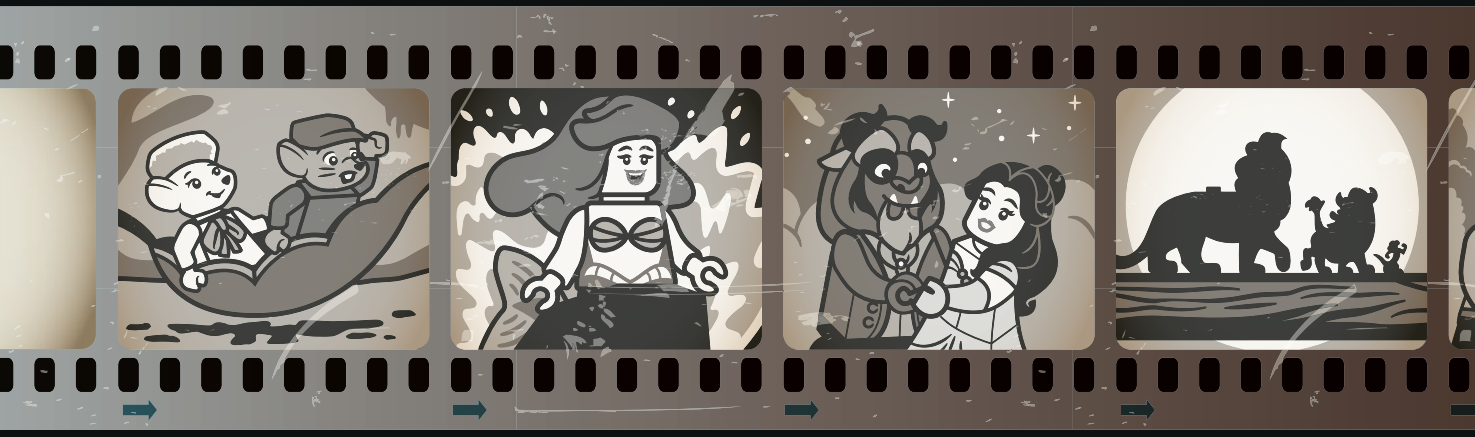

1977
The Rescuers

1989
The Little Mermaid

1990
Beauty and the Beast

1994
The Lion King

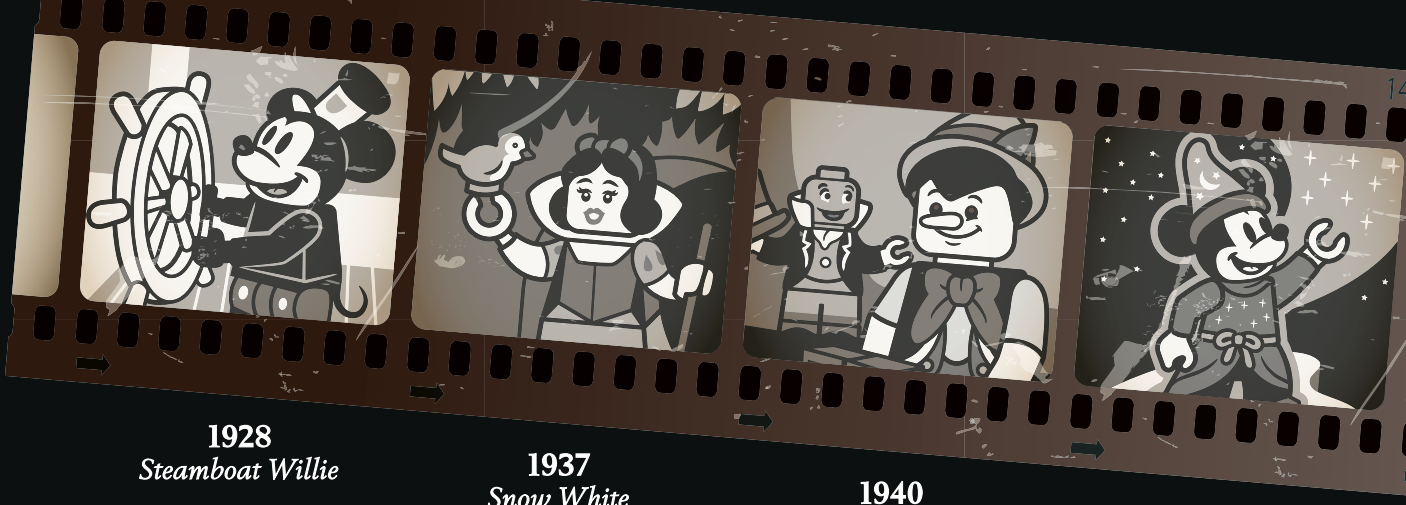

1928
Steamboat Willie

1937
Snow White

1940
Pinocchio

1940
Fantasia

1959
Sleeping Beauty

1963
The Sword in the Stone

1967
The Jungle Book

1973
Robin Hood

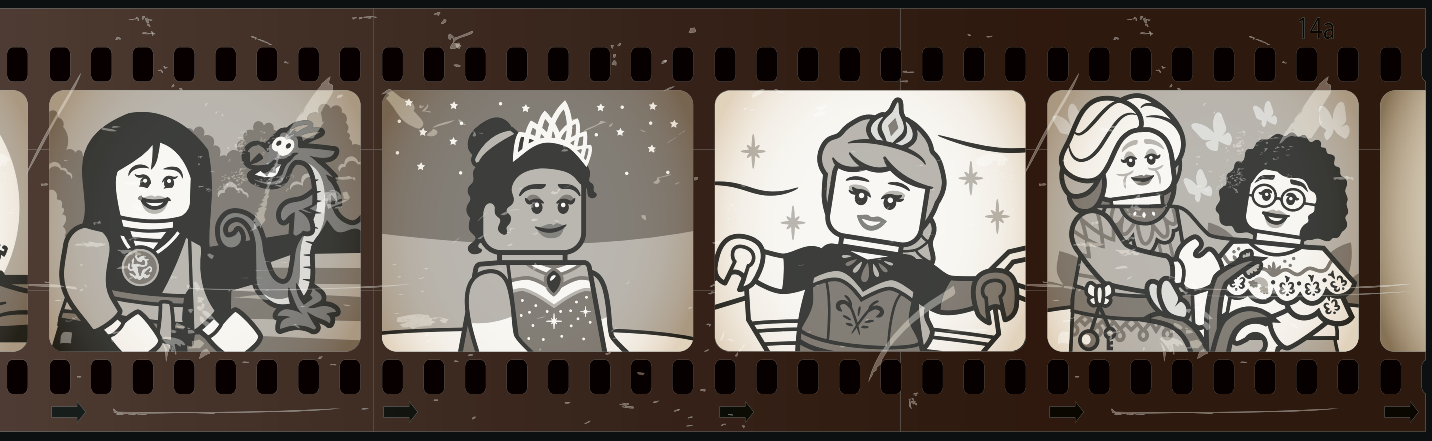

1998
Mulan

2009
The Princess and the Frog

2013
Frozen

2021
Encanto

A note from the LEGO® designers

'The model is designed as a tribute to Walt Disney himself, so adding LEGO® brick versions of the tools and inventions he used for his animated films seemed like a good place to start. With the classic vintage movie camera as the central display piece, we included a clapperboard, a small, hidden office and a minifigure-scale multiplane camera that was used for the early 2D animated movies. The three-layered scene from Walt Disney's short, *The Old Mill* (1937), is depicted just as it was in the real thing!'

- Wes Talbott, LEGO® Design Master

Camilla Thorsted Cording
LEGO Graphic Designer

Wes Talbott
LEGO Design Master

'In our graphic design team, we worked with hundreds of assets to narrow down every detail you see in the set. For the multiplane camera, each layer is a detailed graphic on its own. From dozens of Disney classics, we selected some of the milestone films from the past 100 years that we know fans love. And for the first time, we are excited to present Dumbo and Bambi as LEGO® figures!'

- Camilla Thorsted Cording, LEGO® Graphic Designer

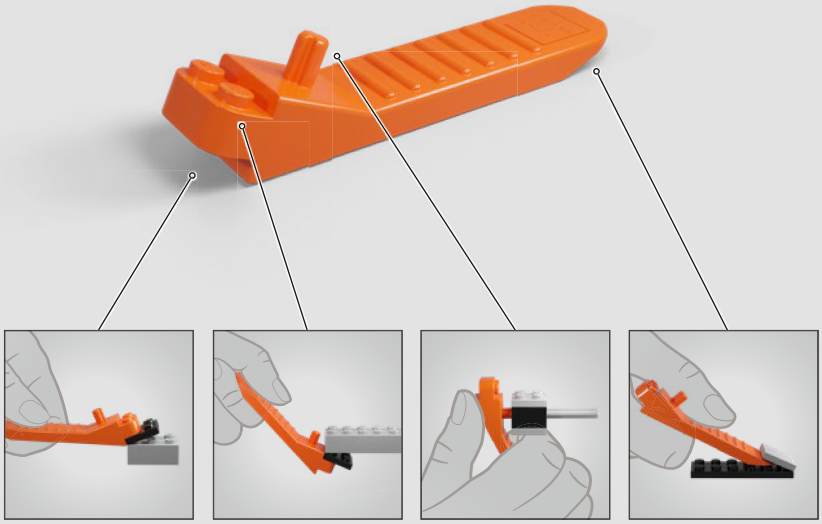

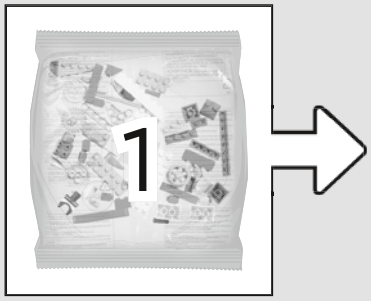
1

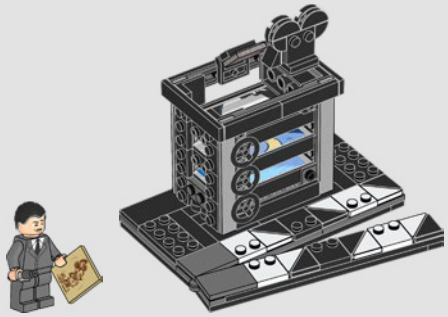

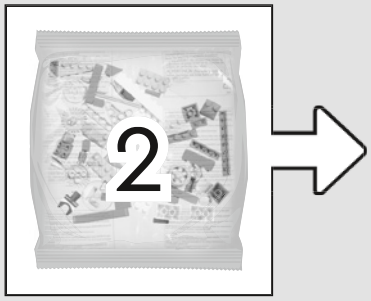
2

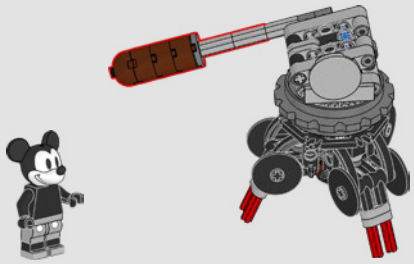

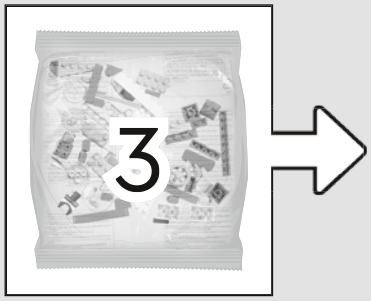
3

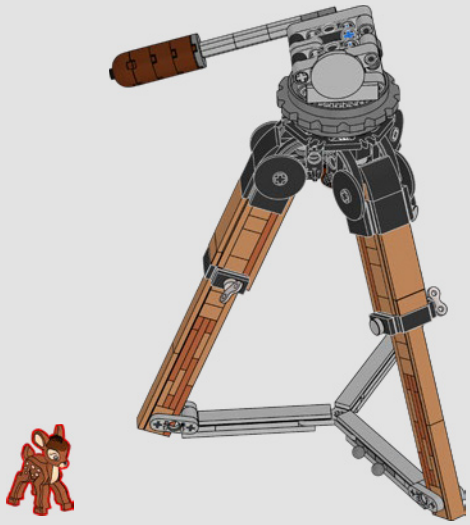

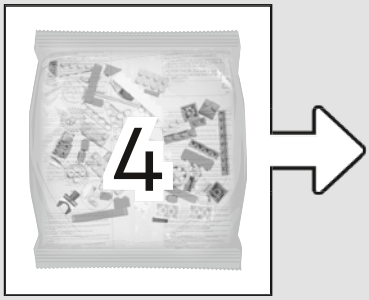
4

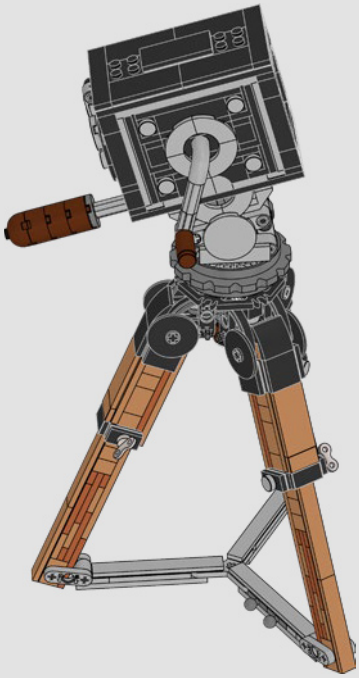

5
6

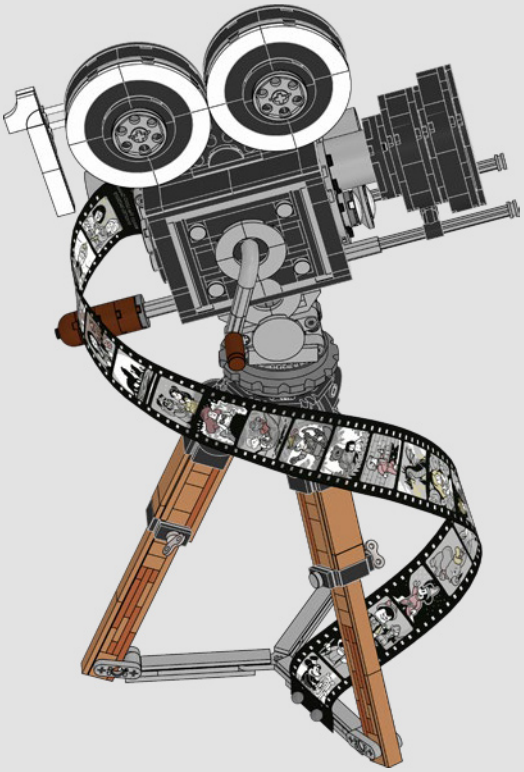

1

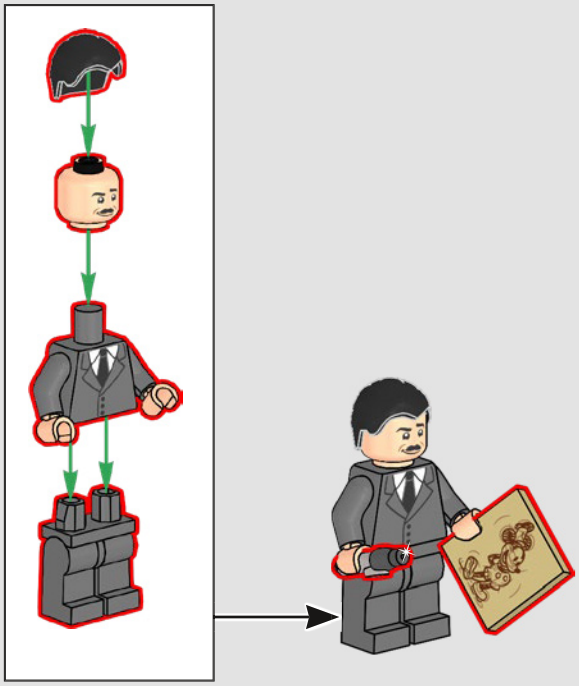

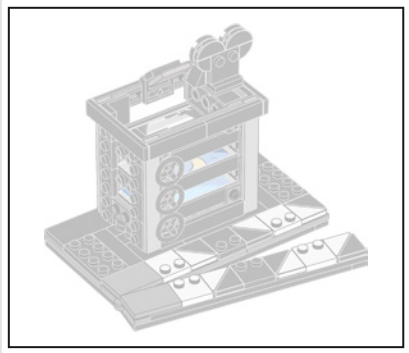

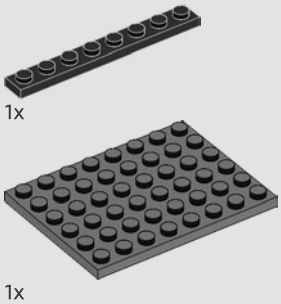

1

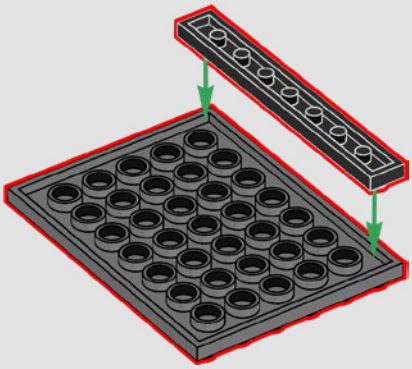

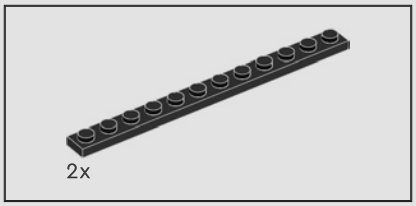

2

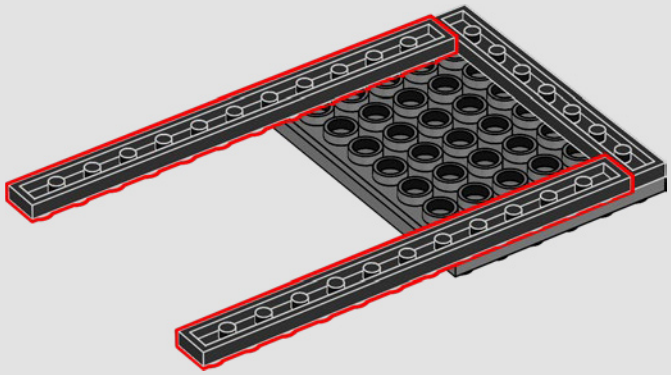

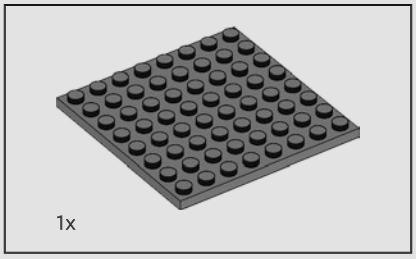

3

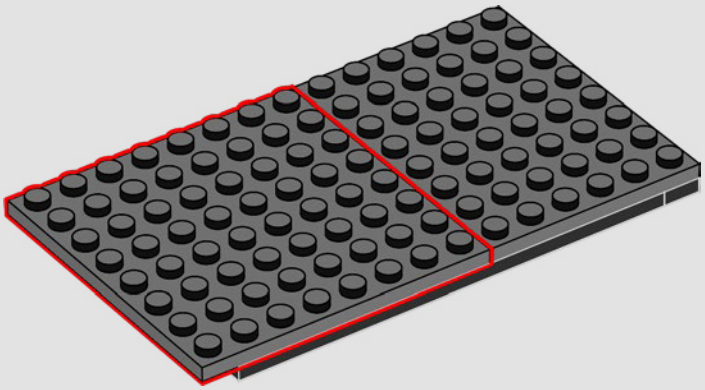

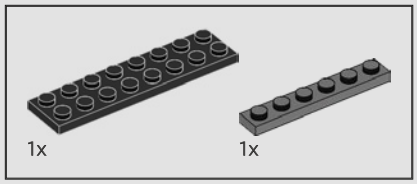

4

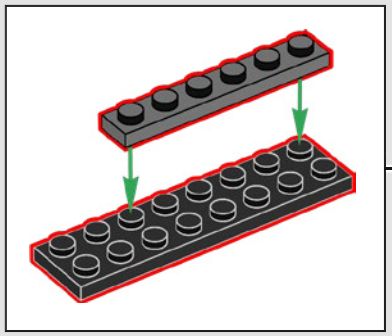

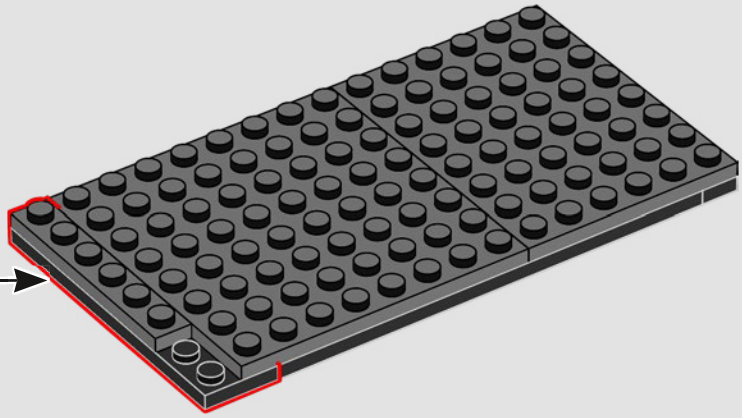

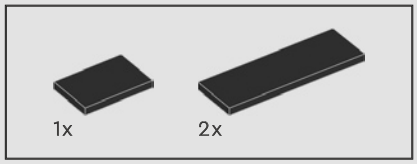

5

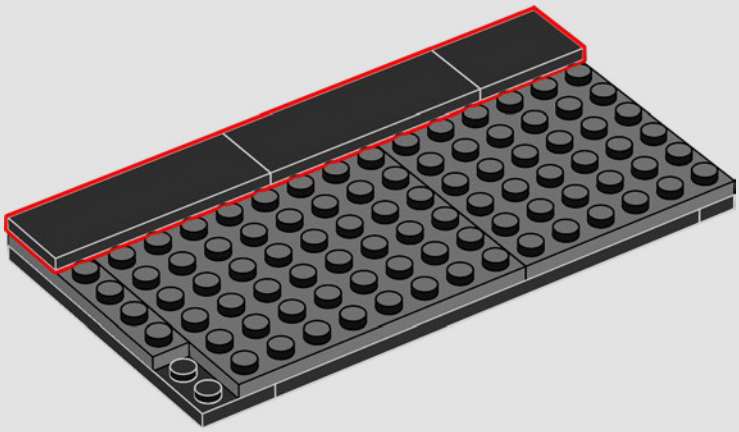

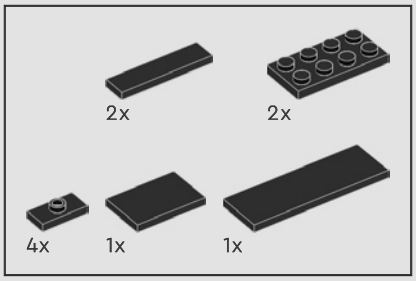

6

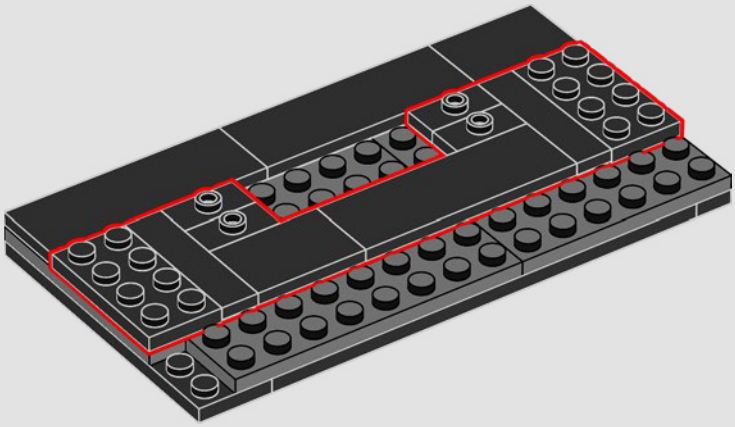

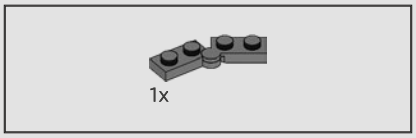

7

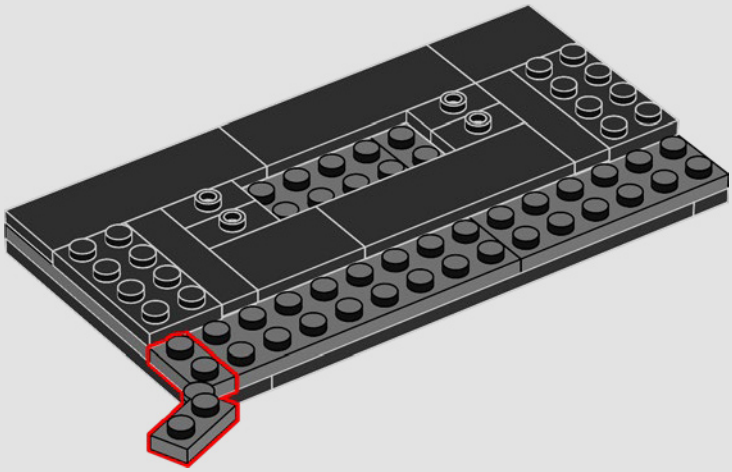

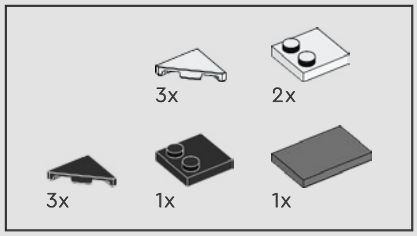

8

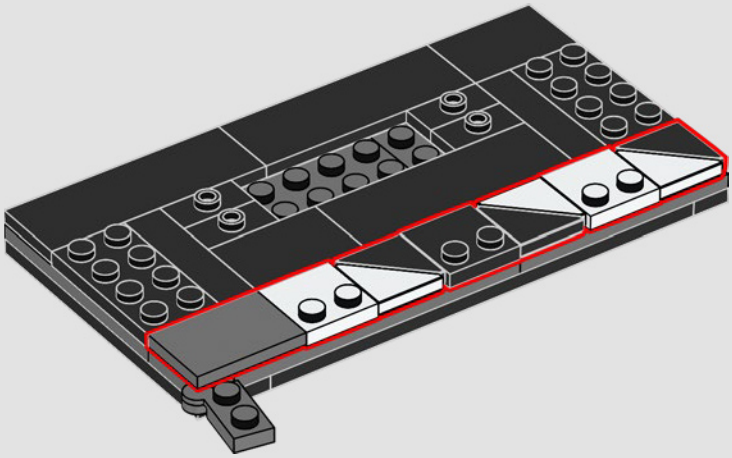

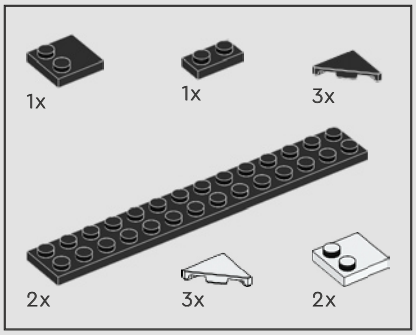

9

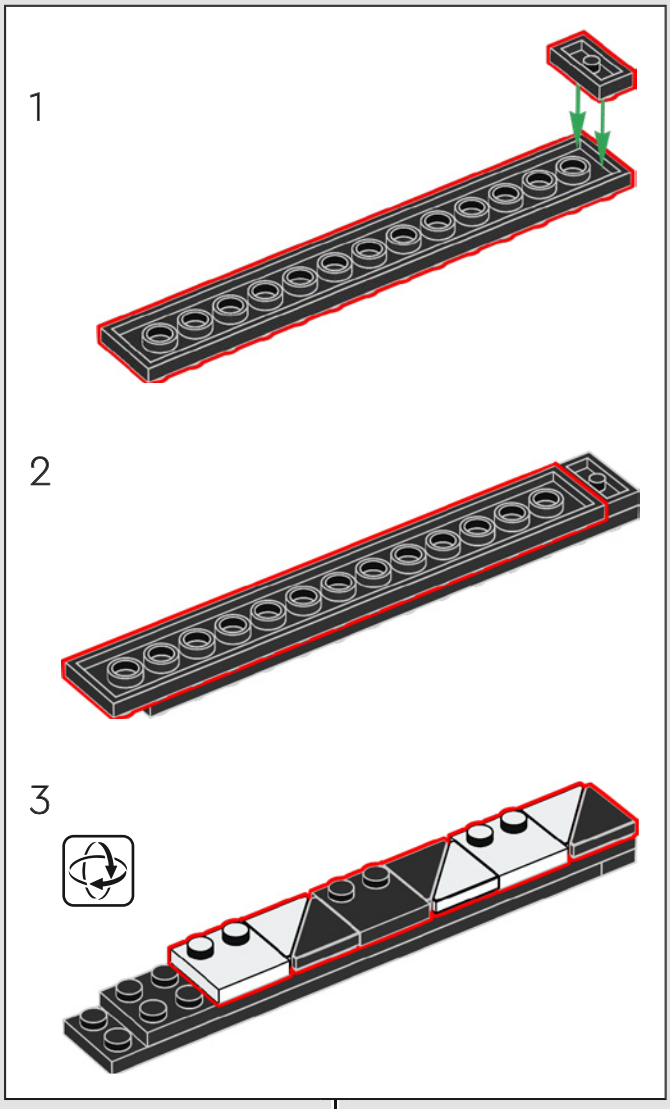

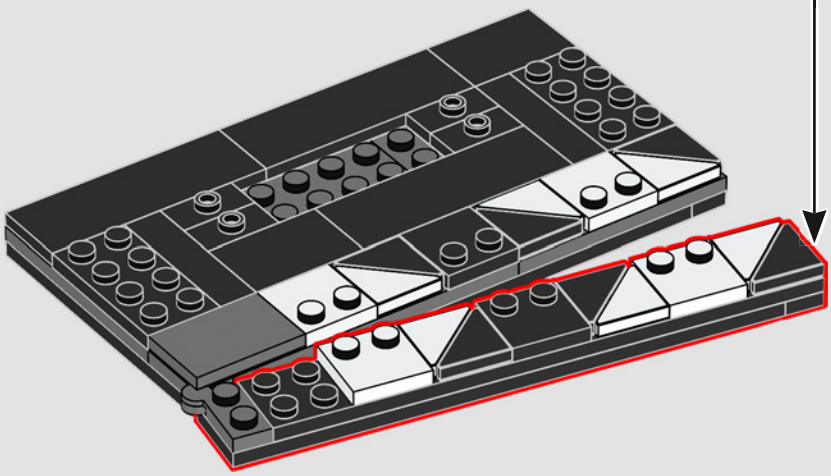

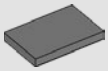

10

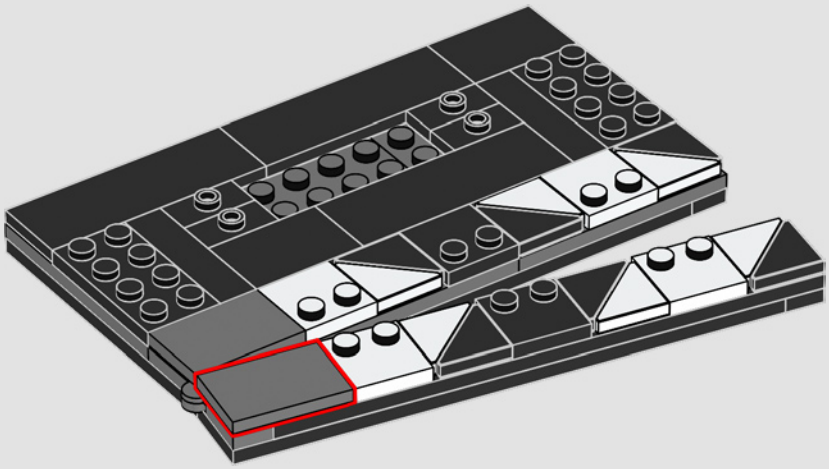

11

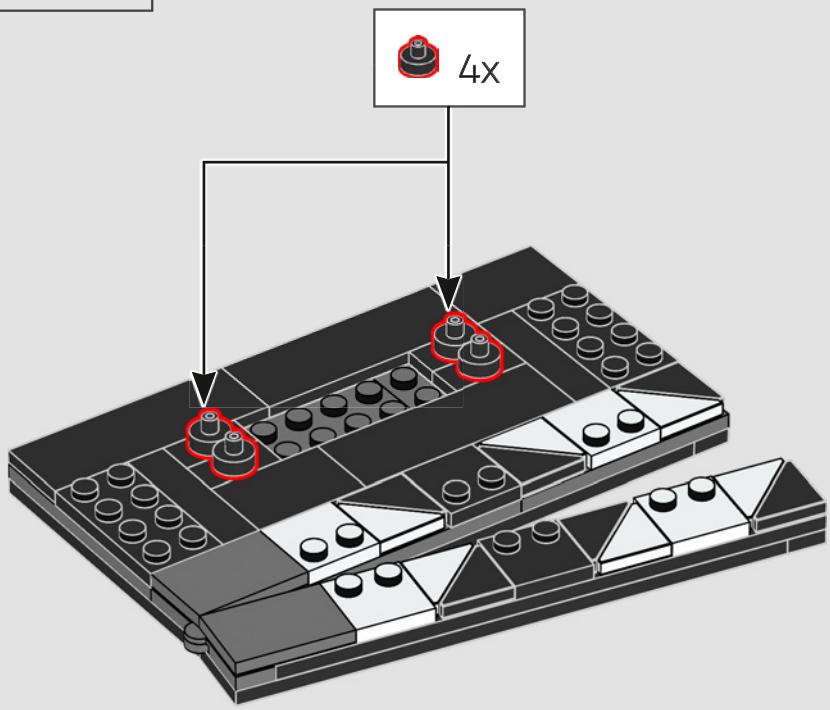

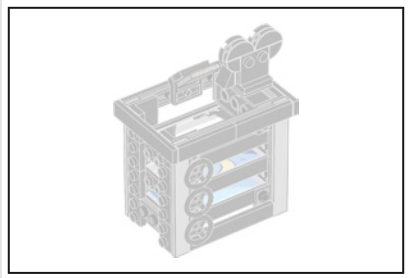

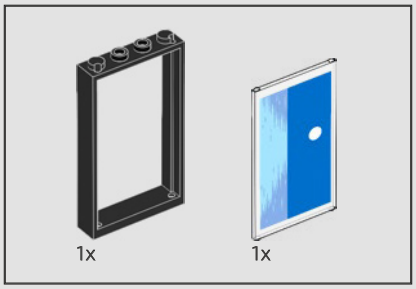

12

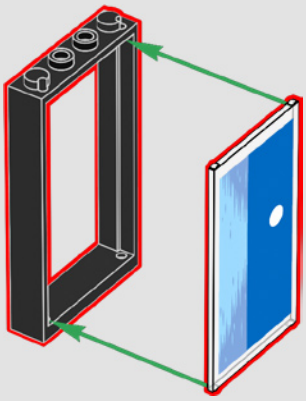

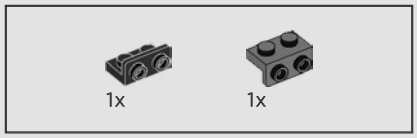

13

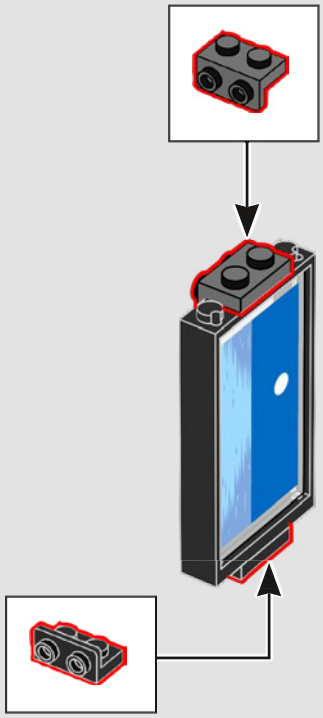

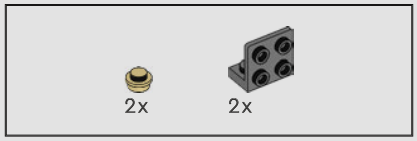

14

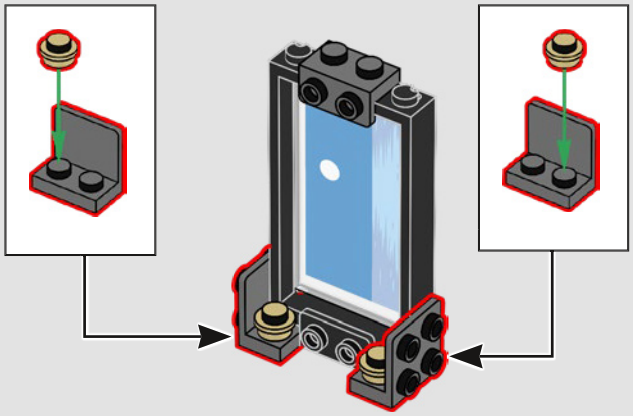

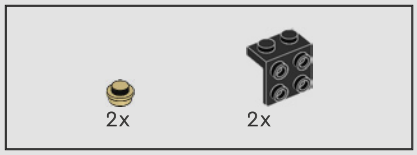

15

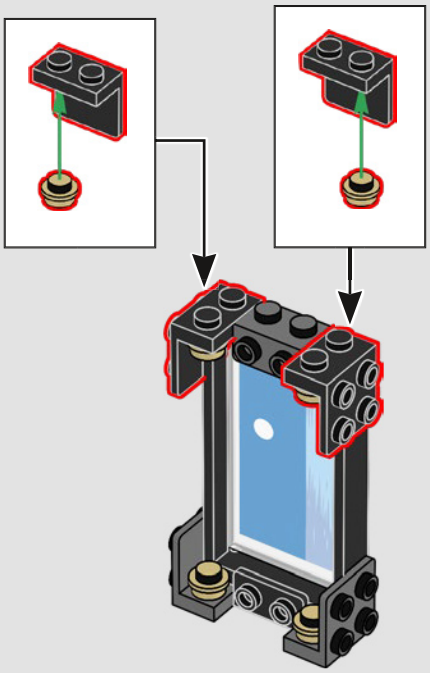

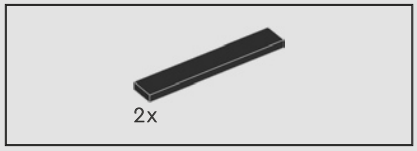

16

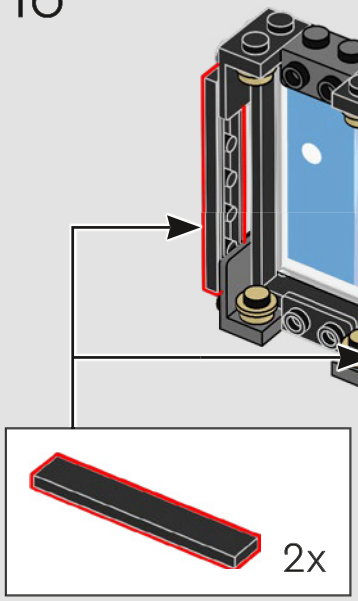

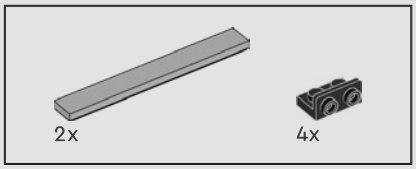

17

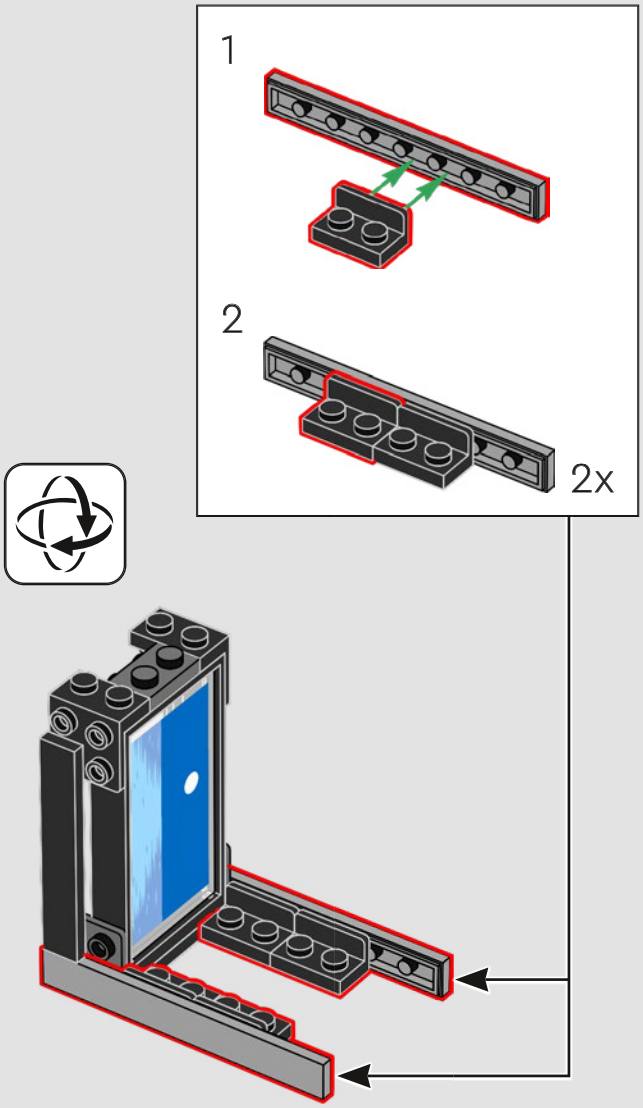

18

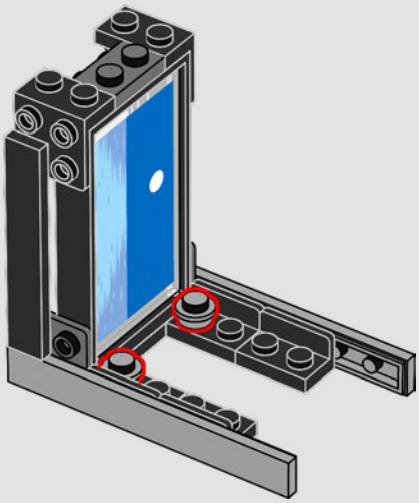

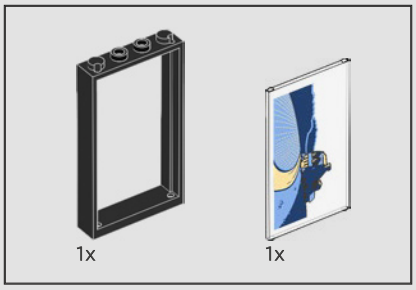

19

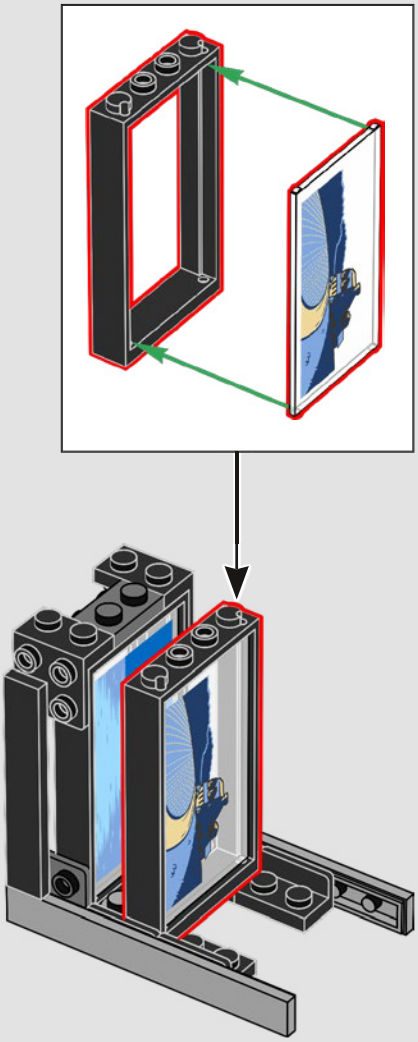

20

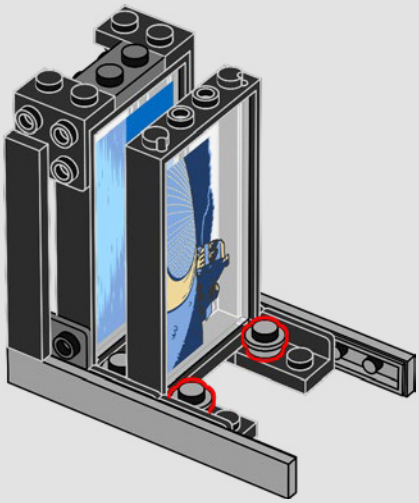

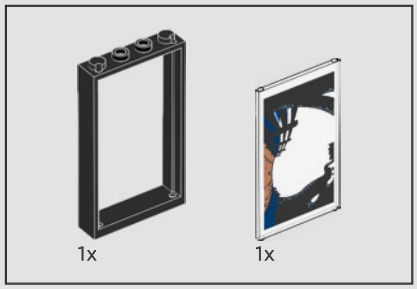

21

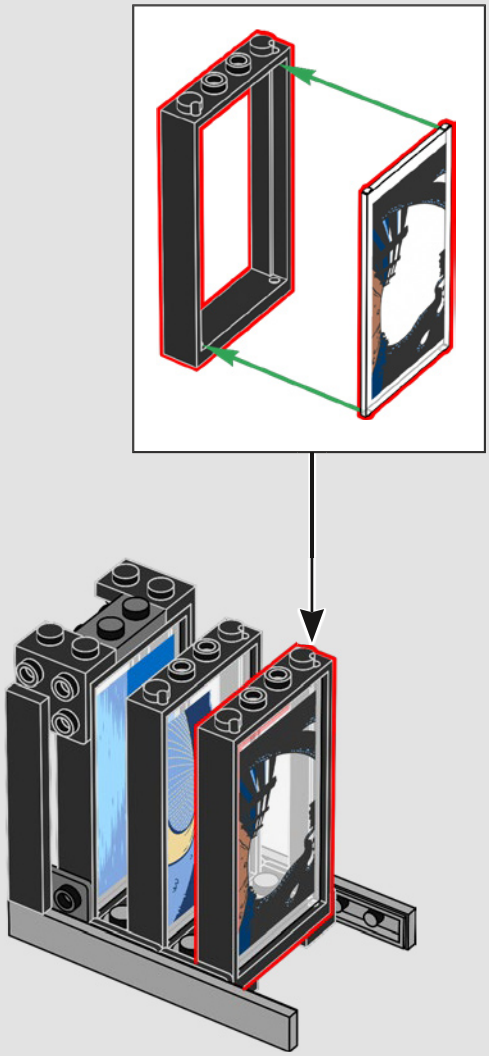

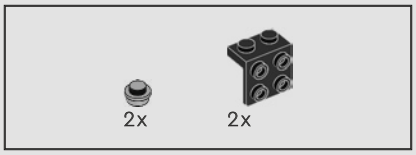

22

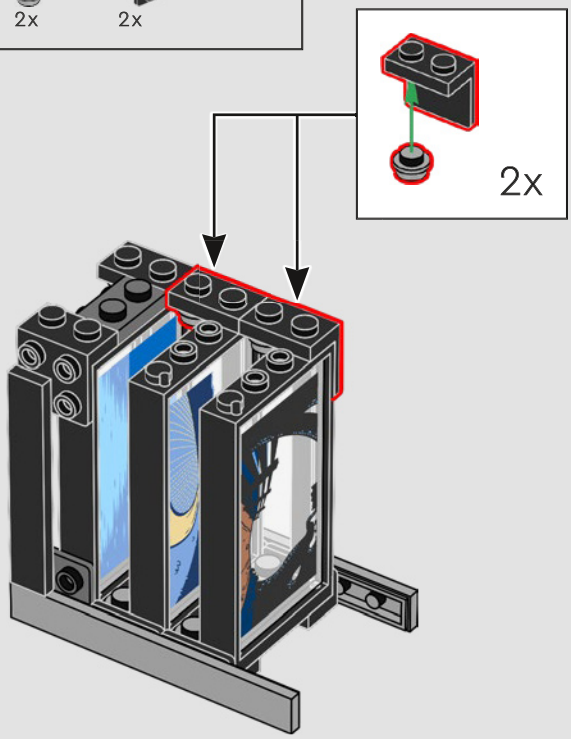

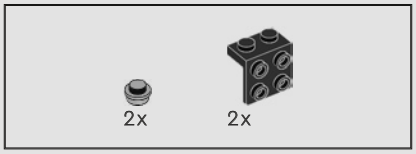

23

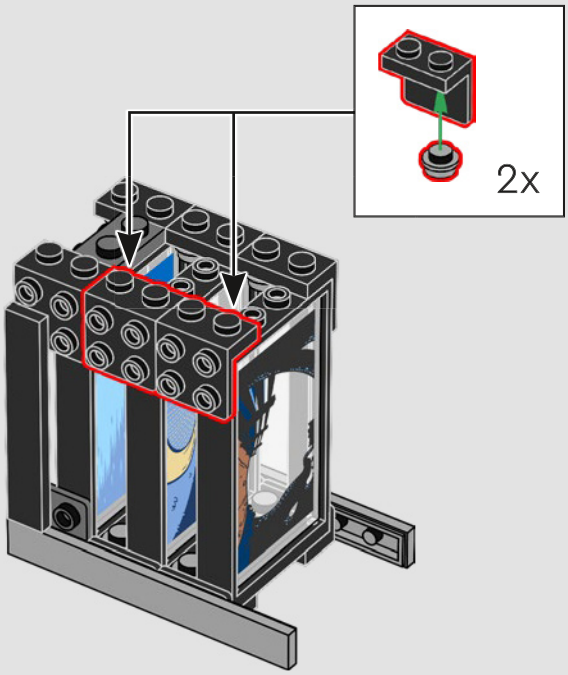

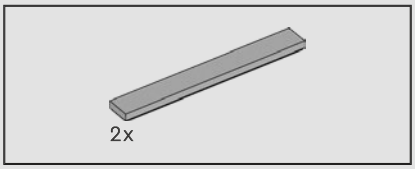

24

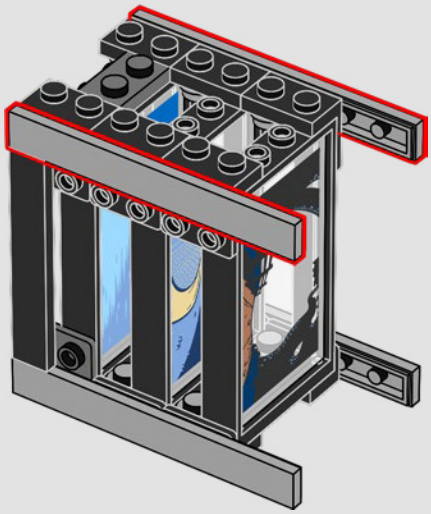

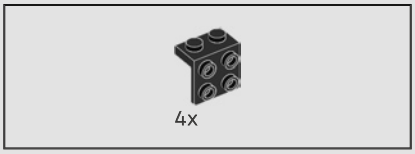

25

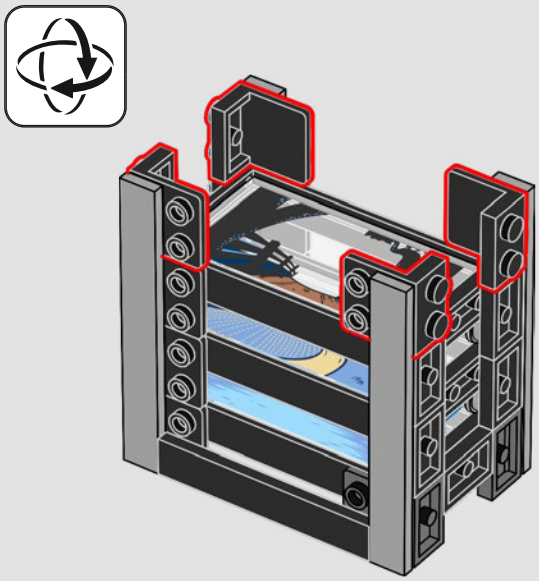

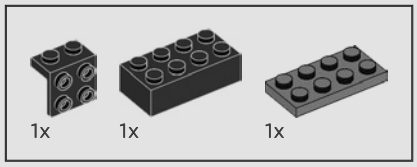

26

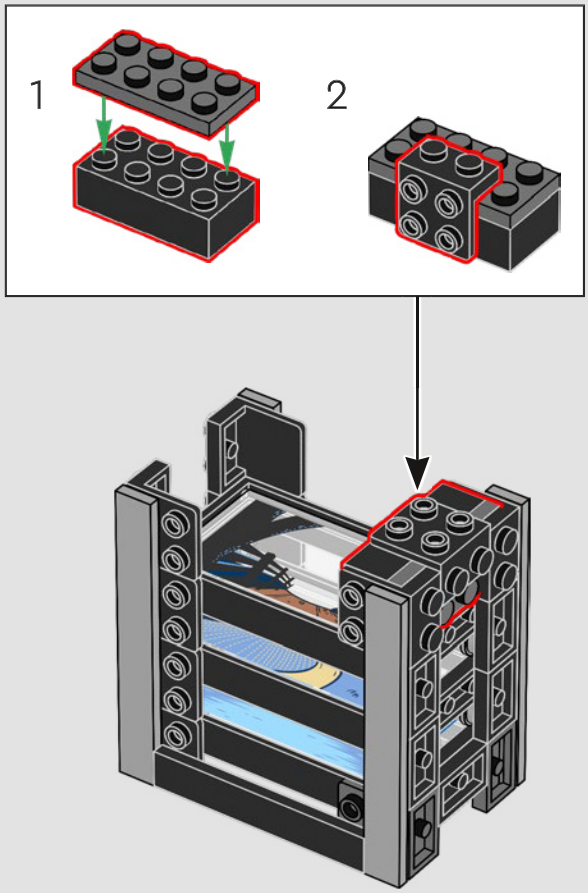

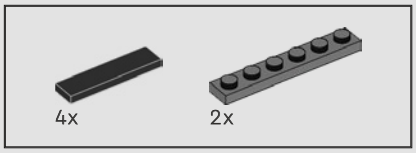

27

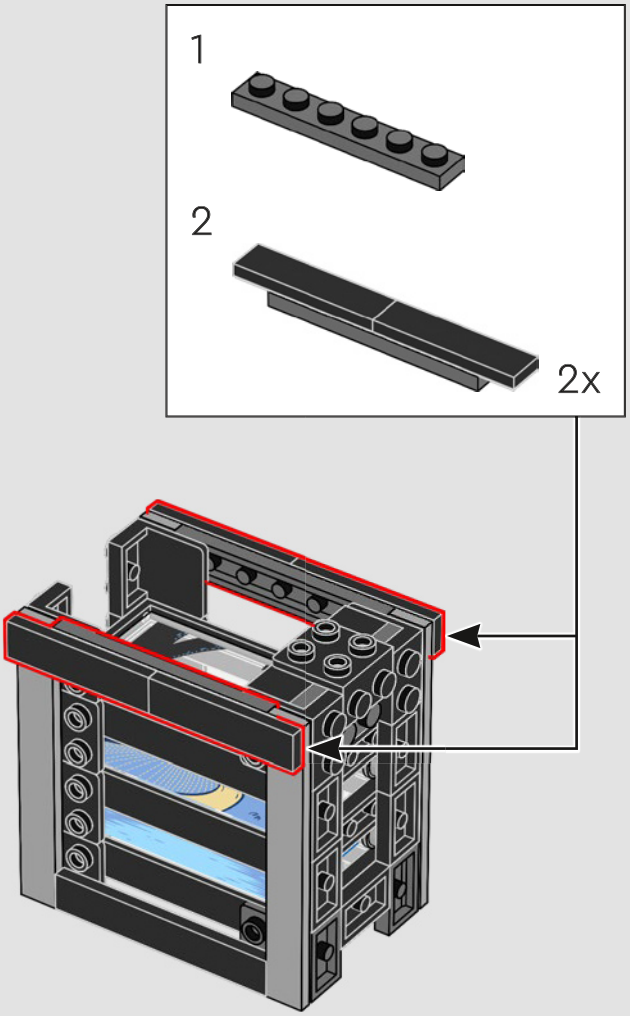

28

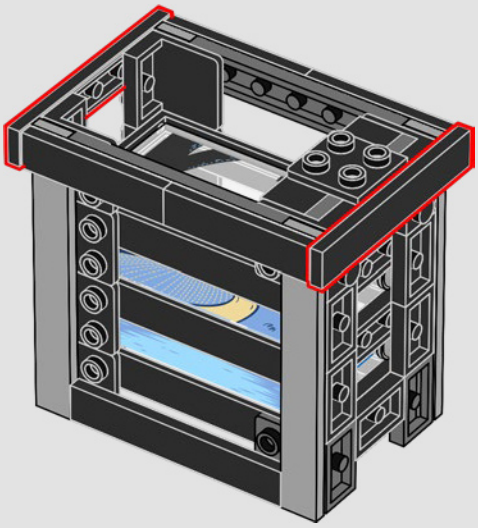

29

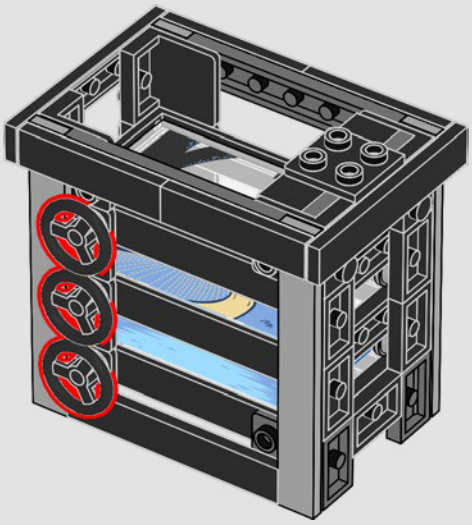

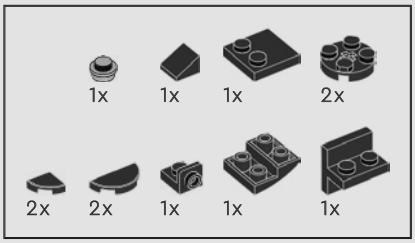

30

1

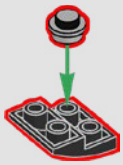

2

3

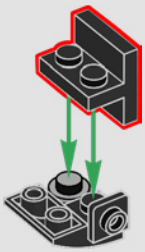

4

5

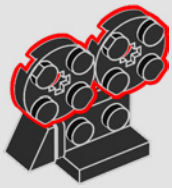

6

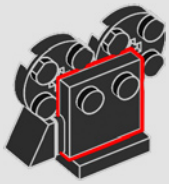

7

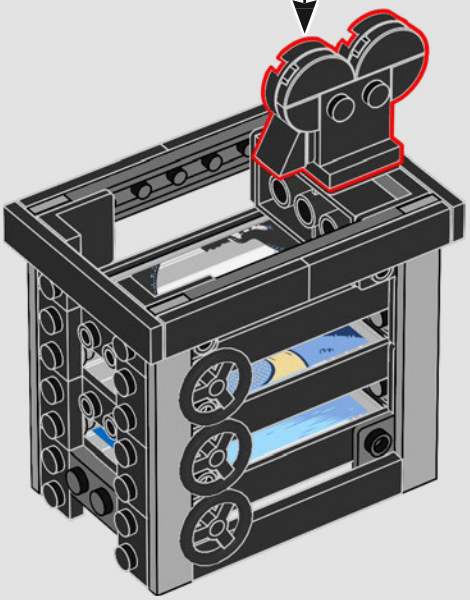

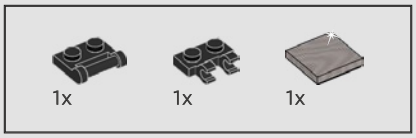

31

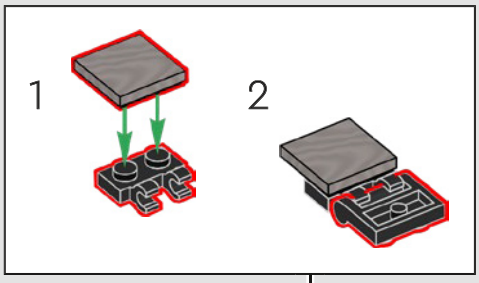

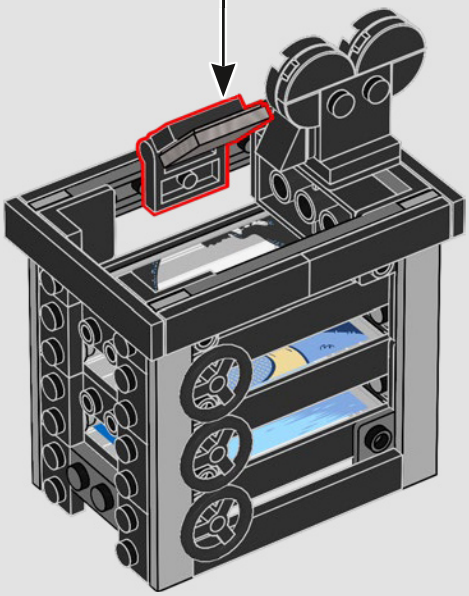

32

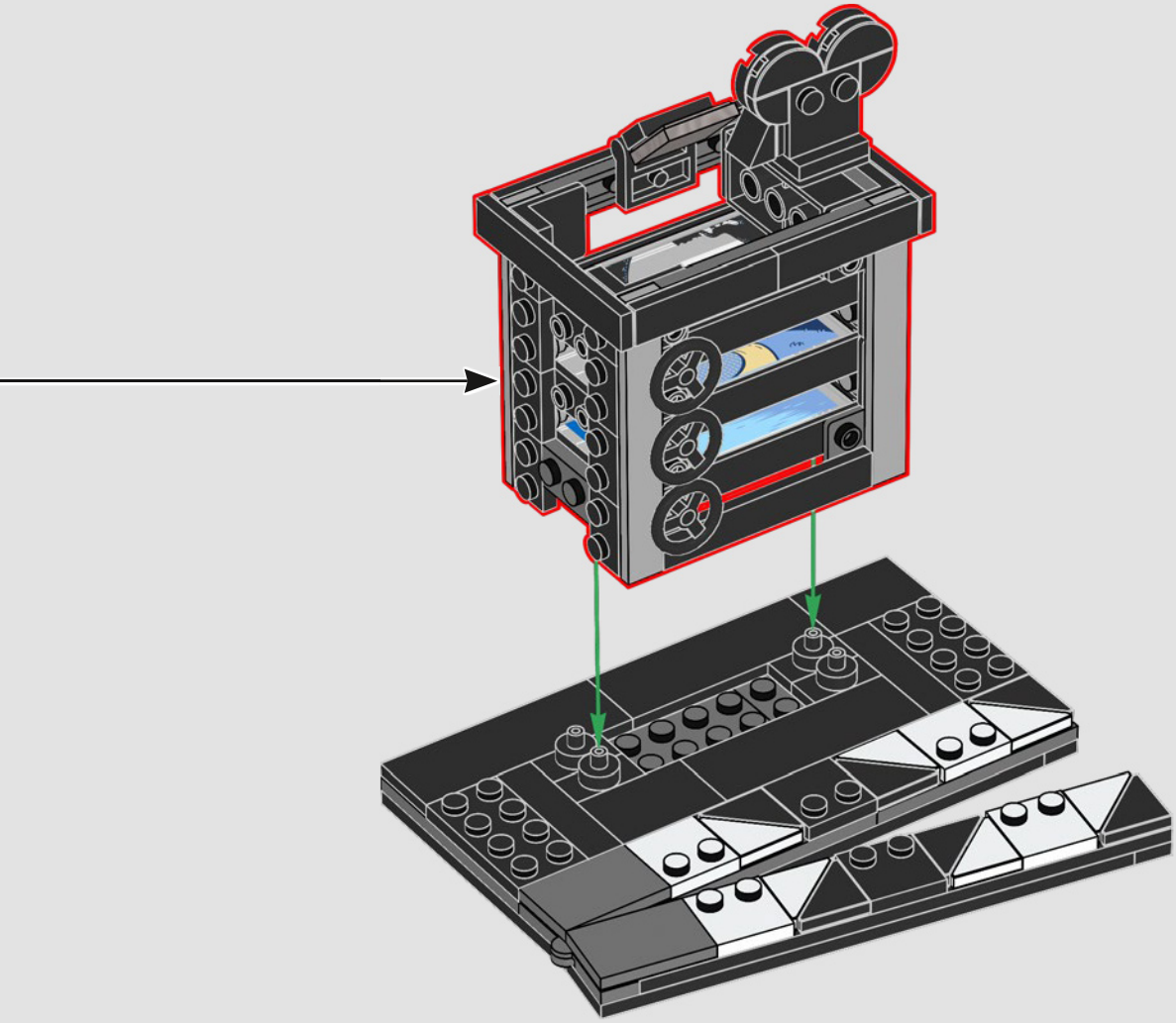

2

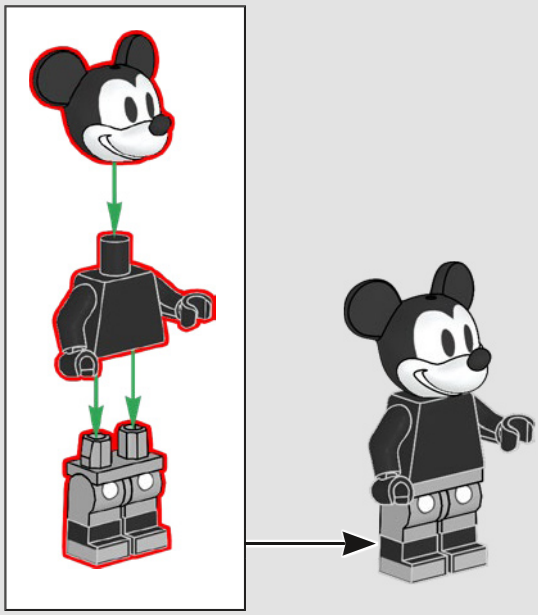

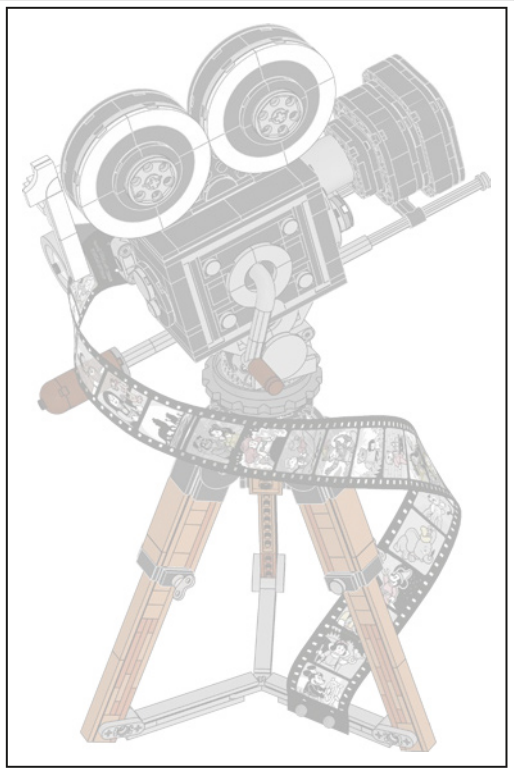

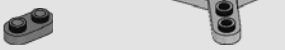

1

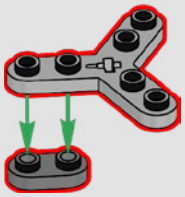

2

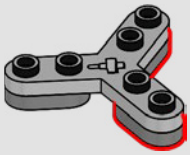

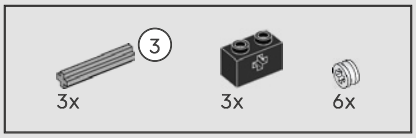

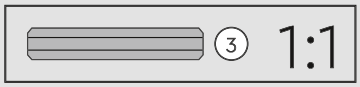

3

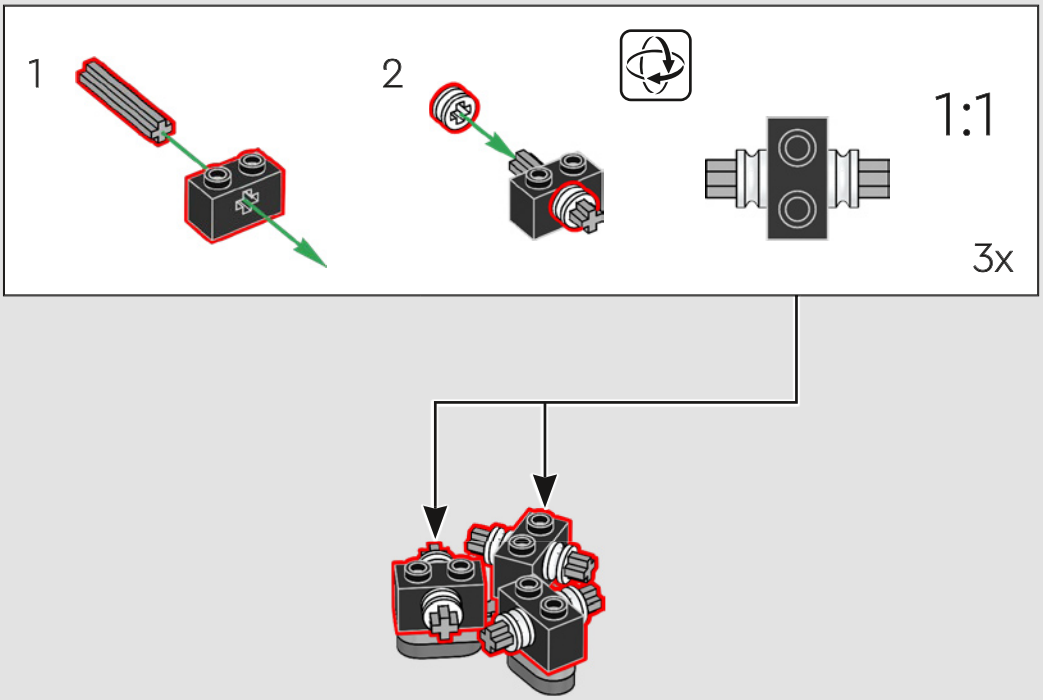

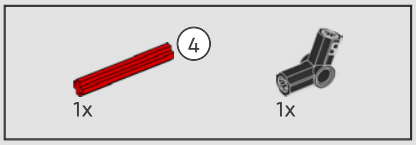

4

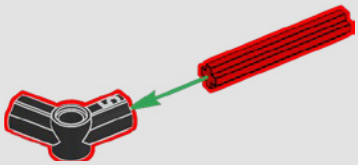

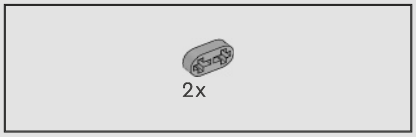

5

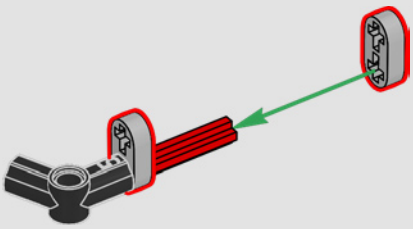

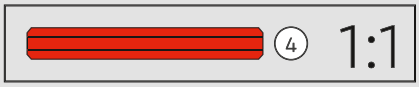

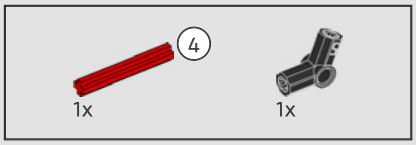

6

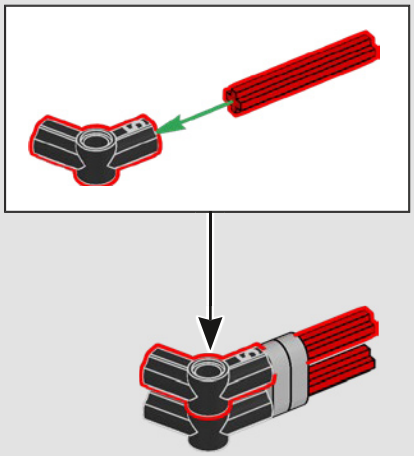

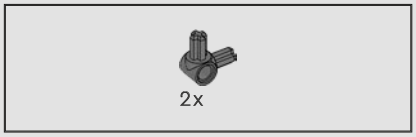

7

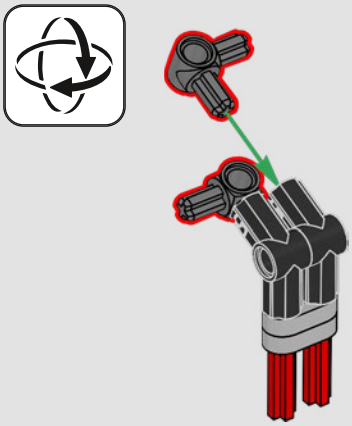

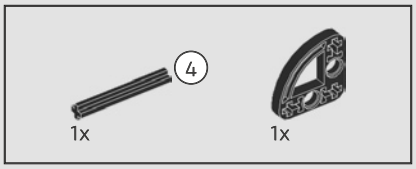

8

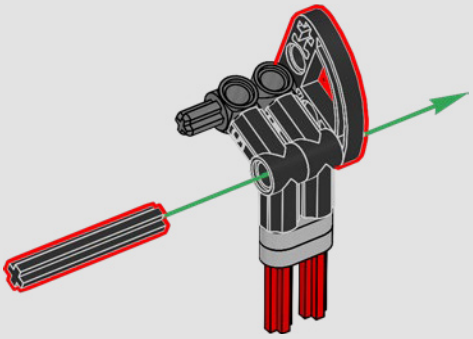

9

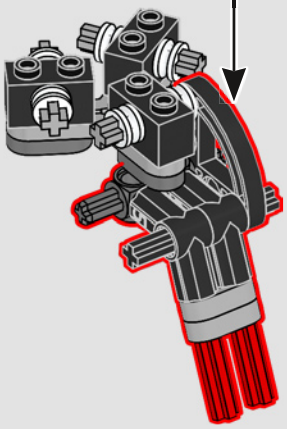

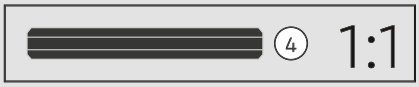

10

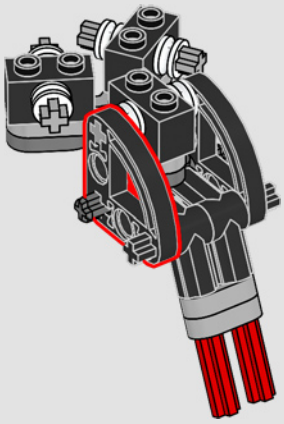

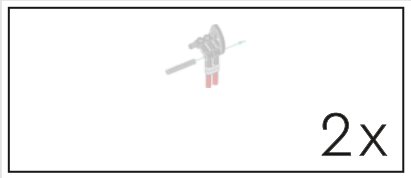

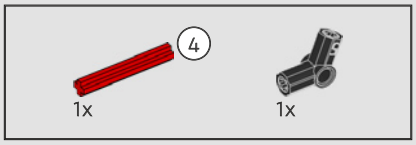

11

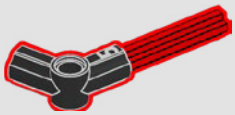

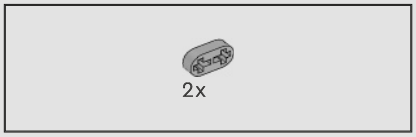

12

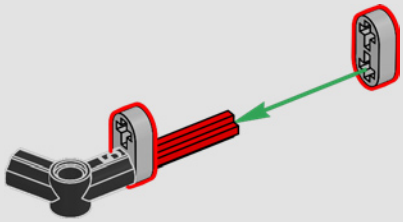

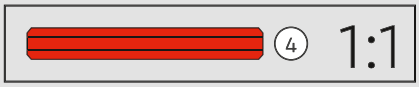

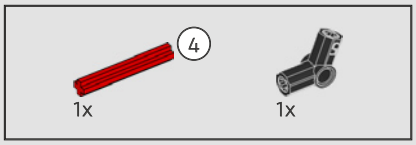

13

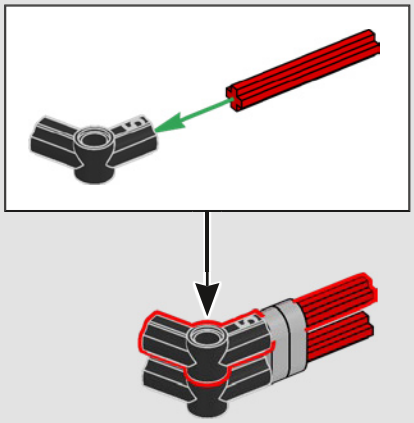

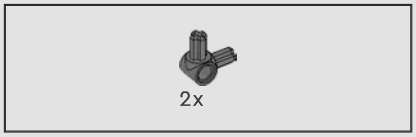

14

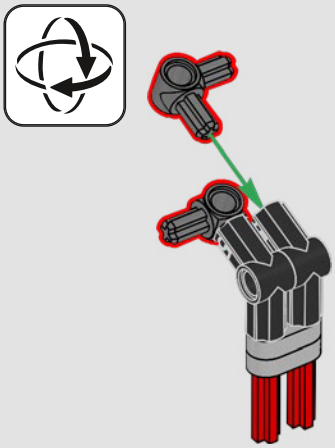

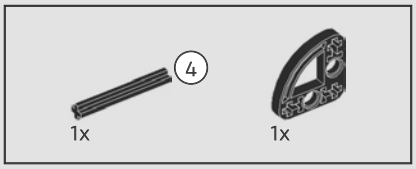

15

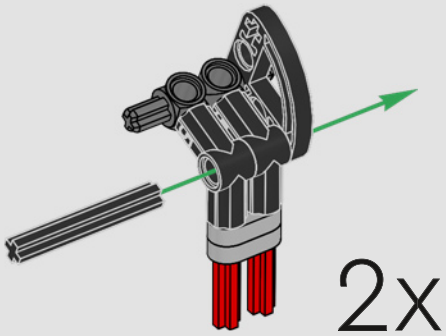

16

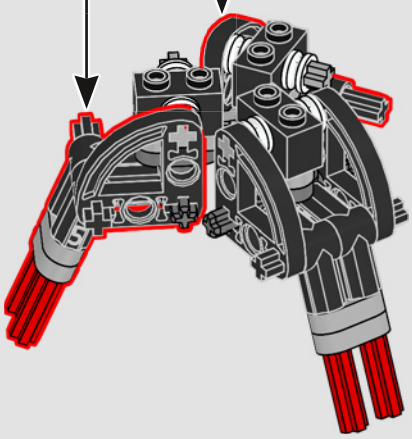

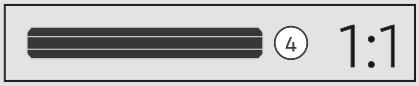

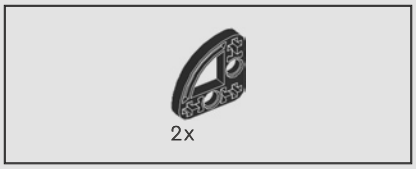

17

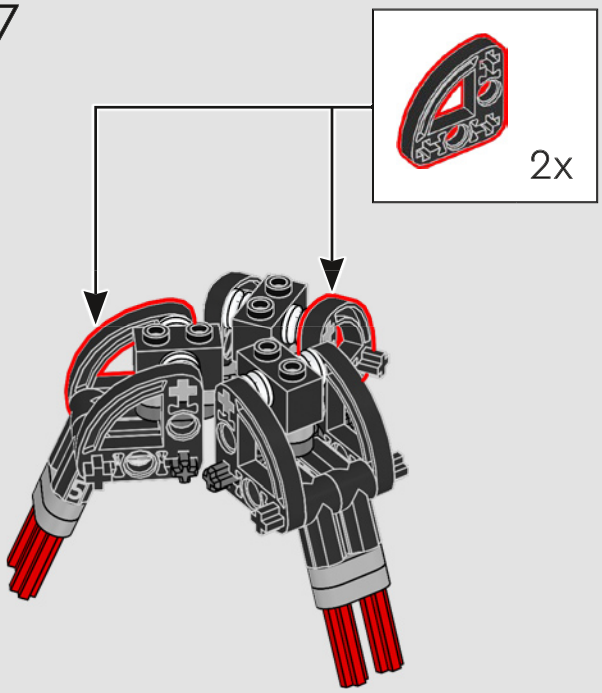

18

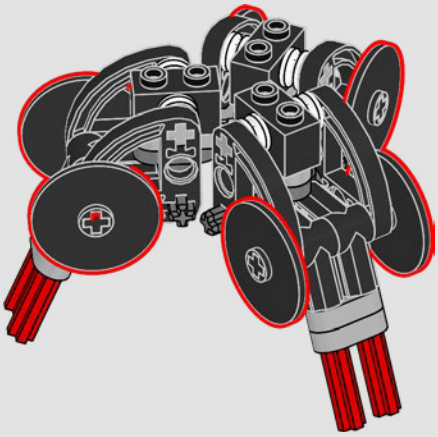

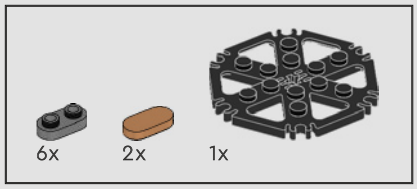

19

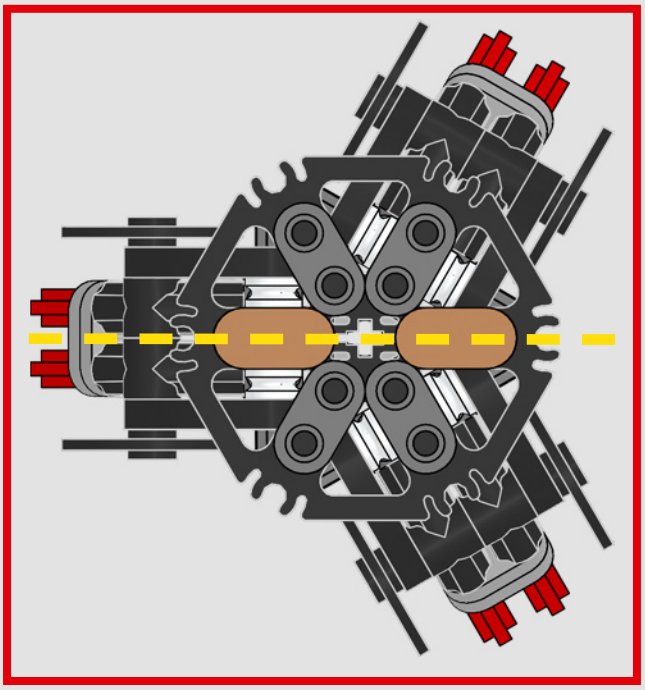

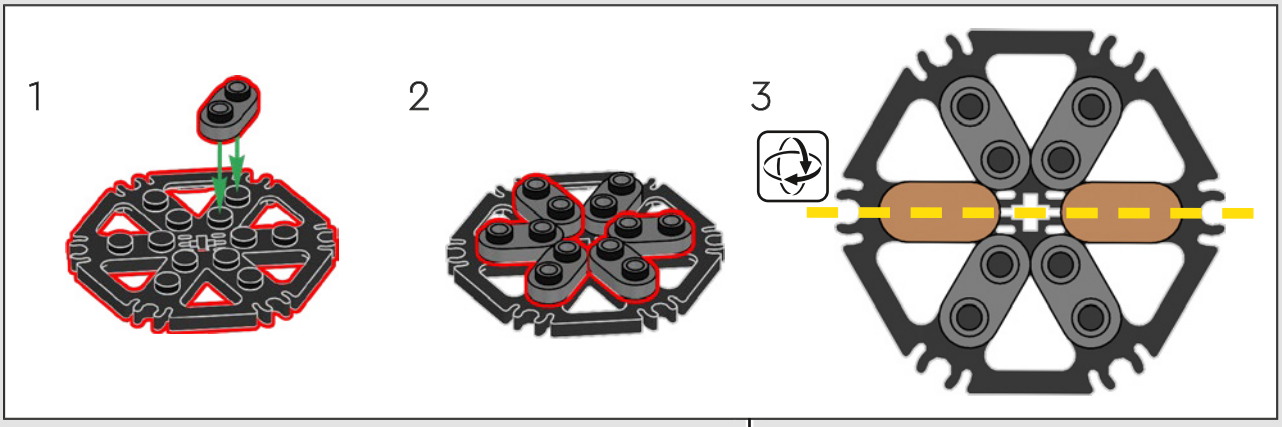

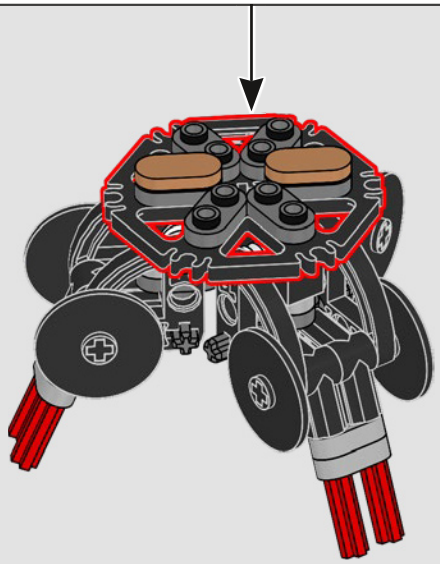

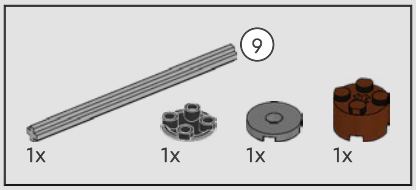

20

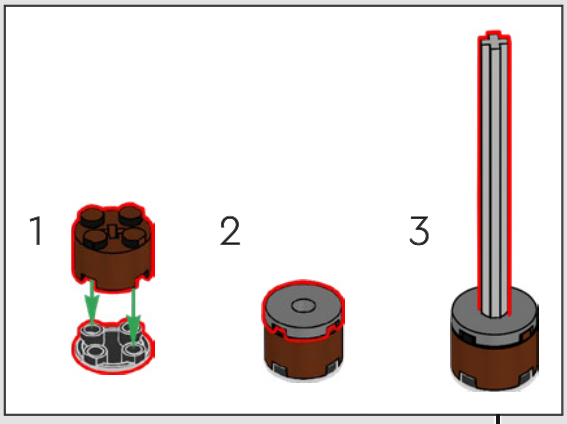

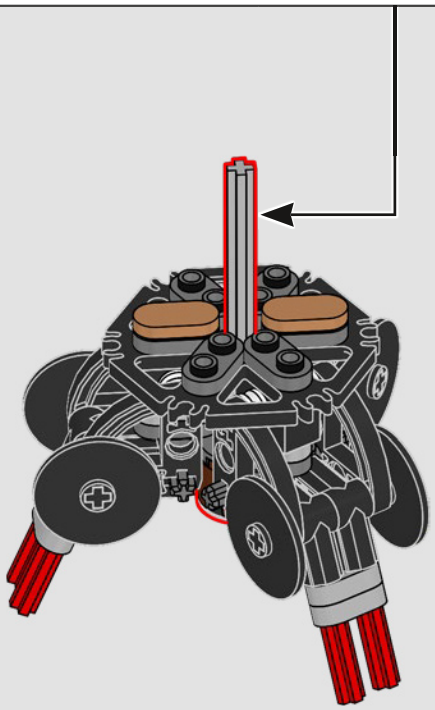

21

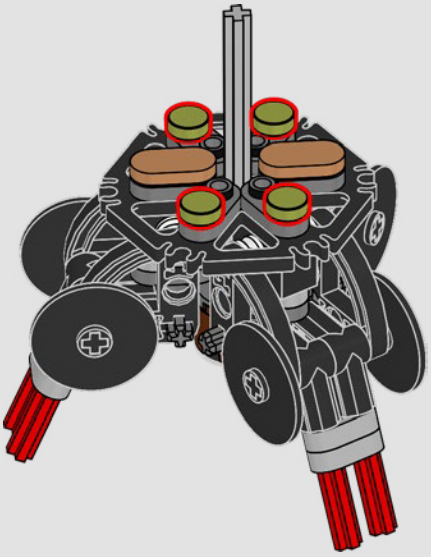

22

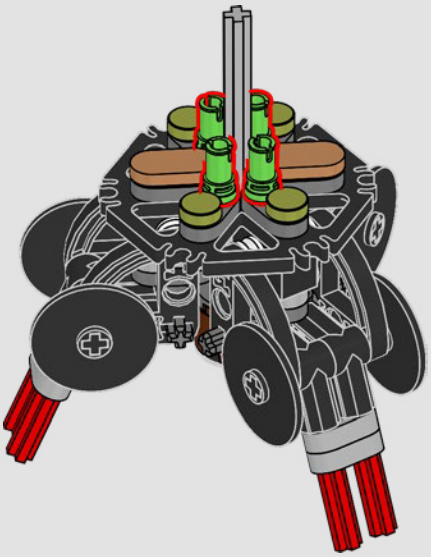

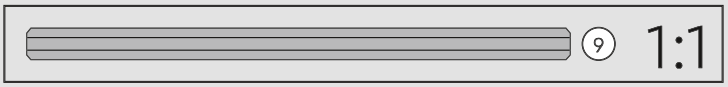

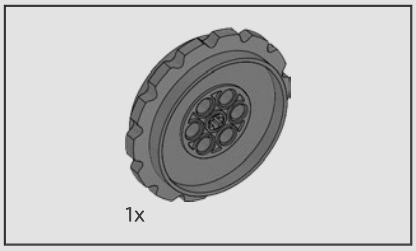

23

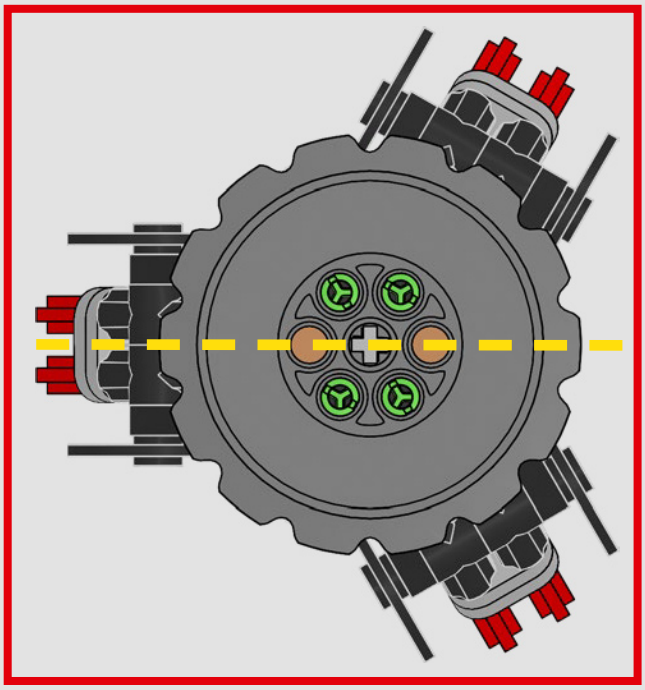

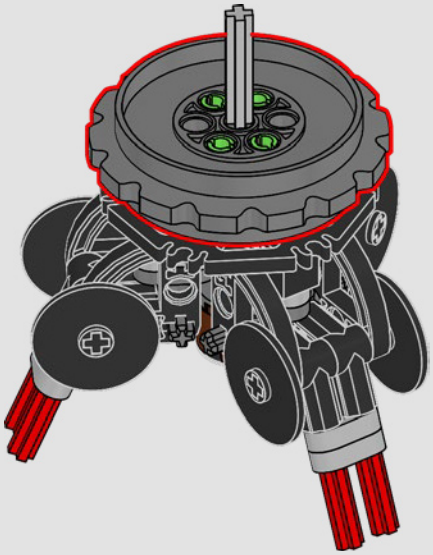

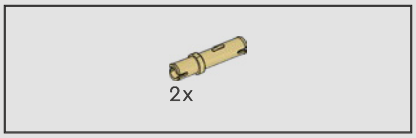

24

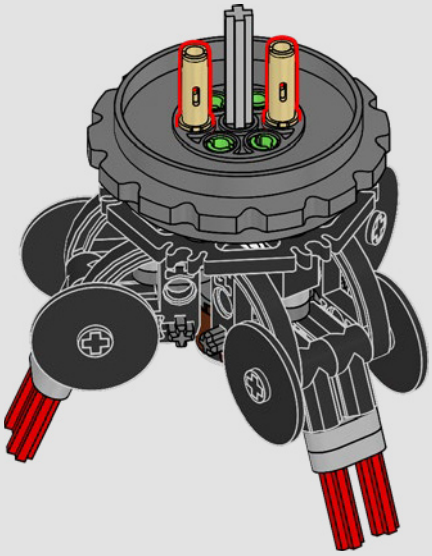

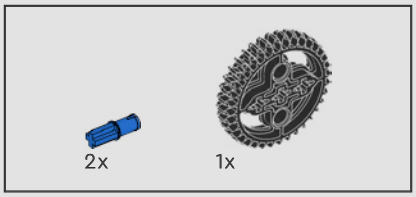

25

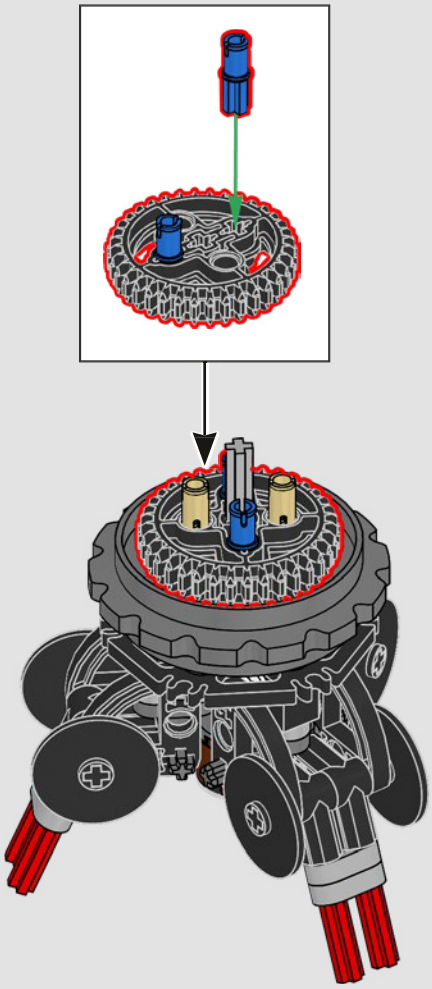

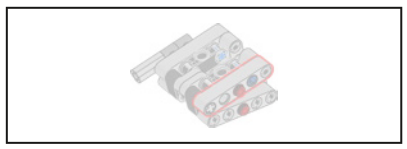

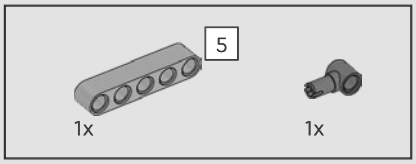

26

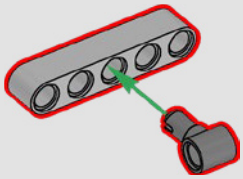

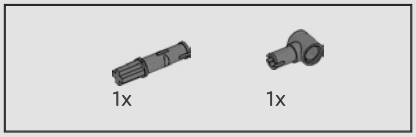

27

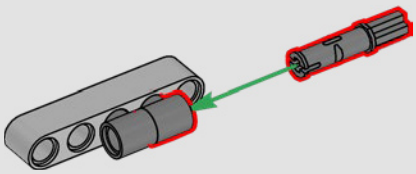

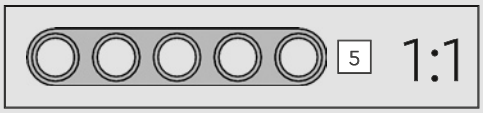

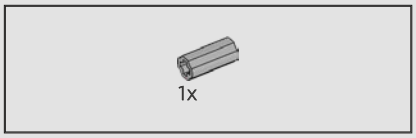

28

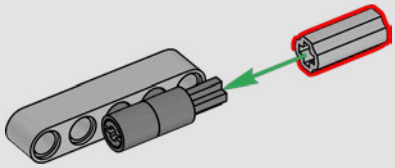

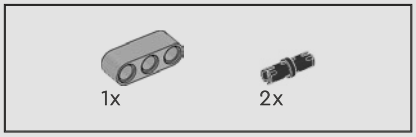

29

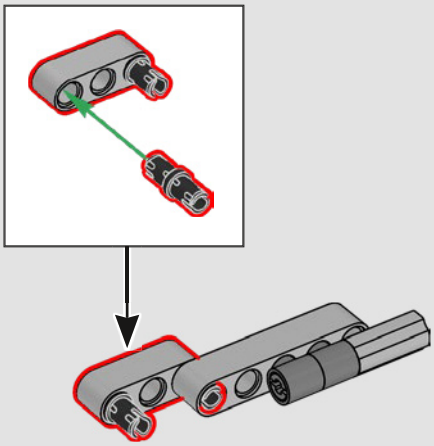

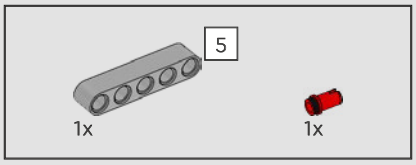

30

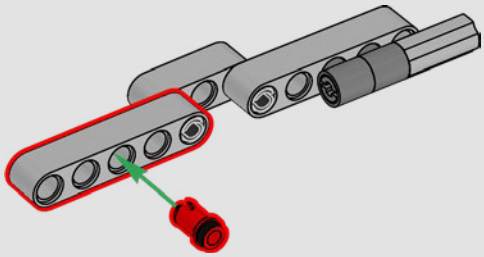

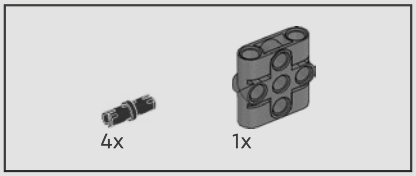

31

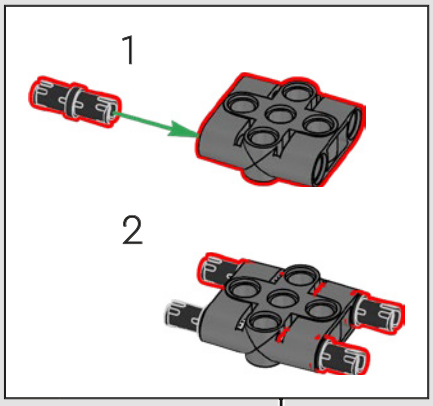

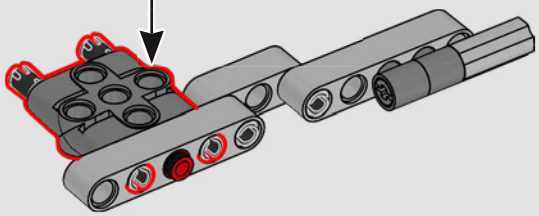

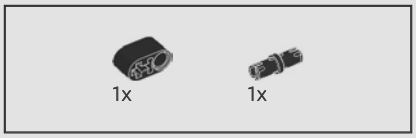

32

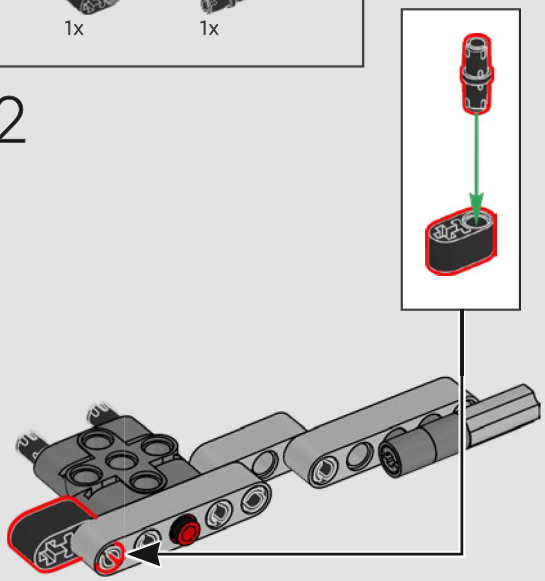

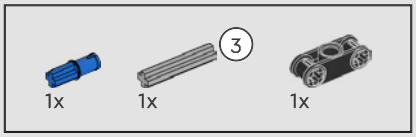

33

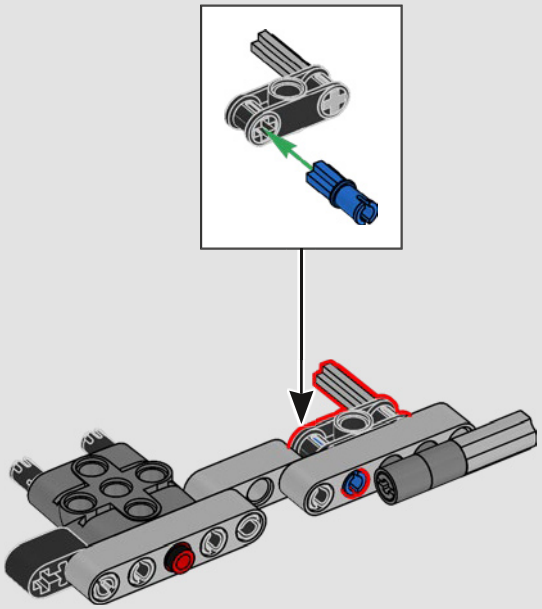

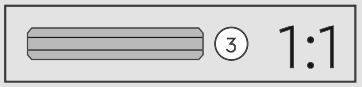

34

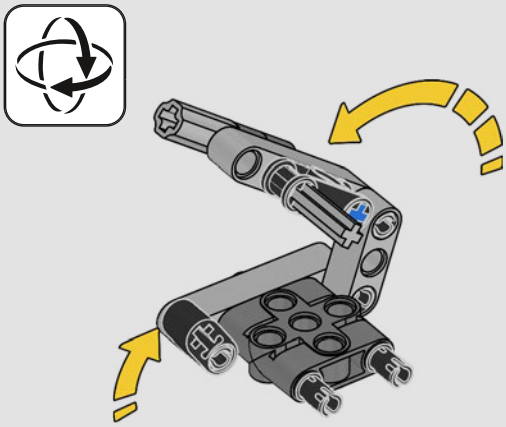

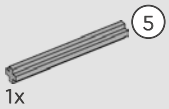

35

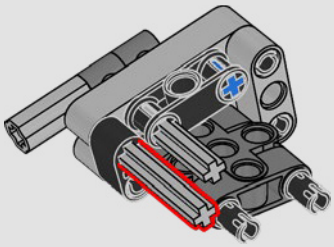

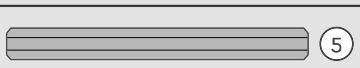

1:1

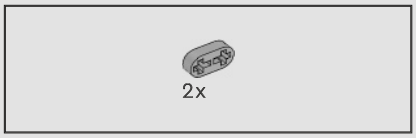

36

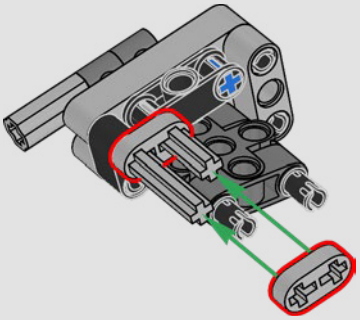

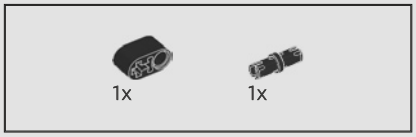

37

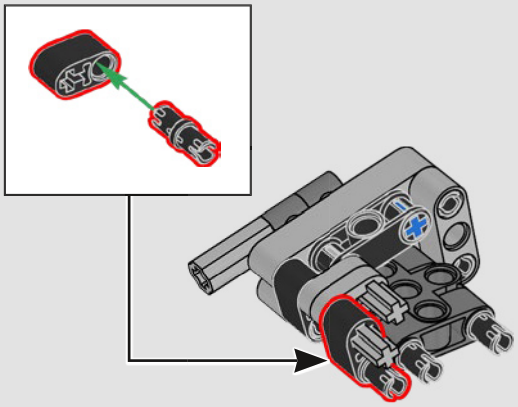

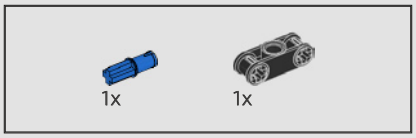

38

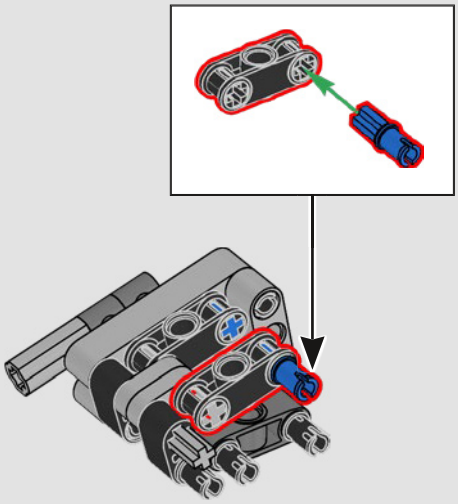

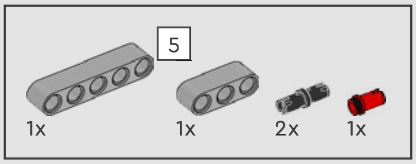

39

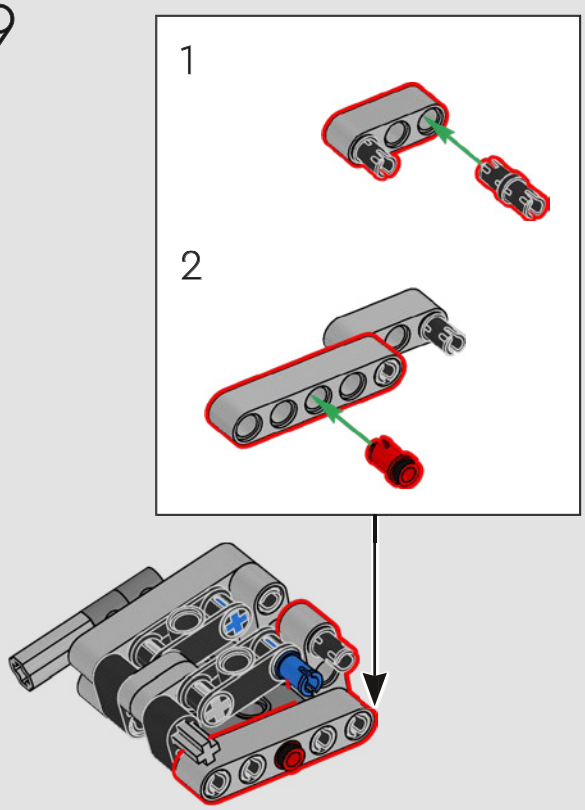

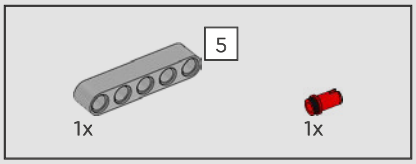

40

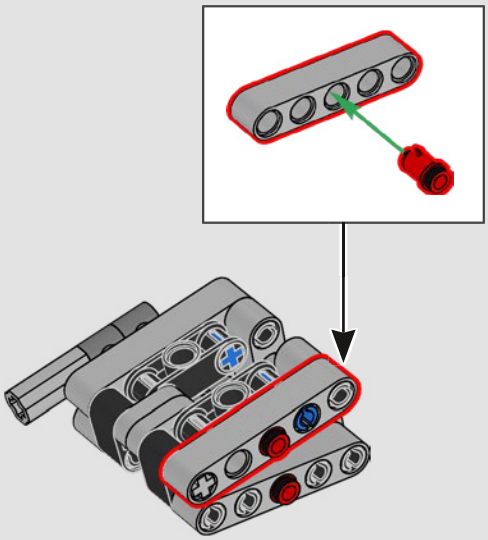

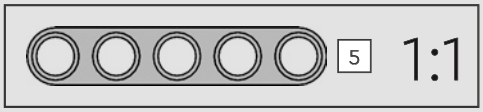

41

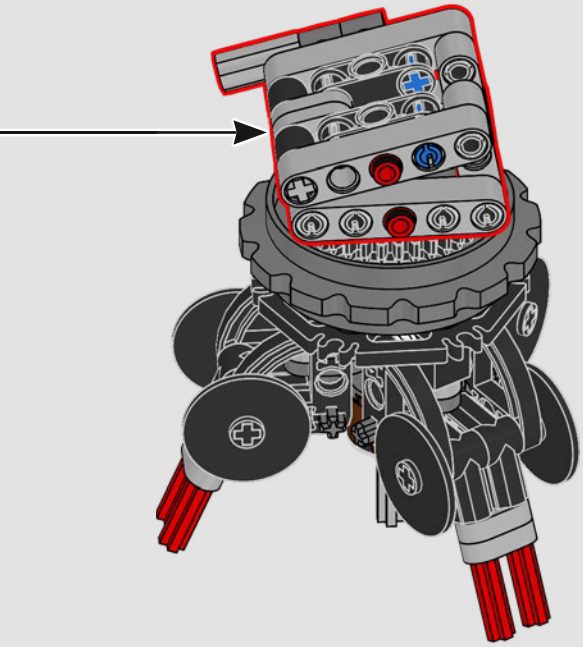

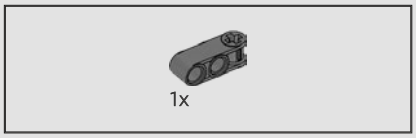

42

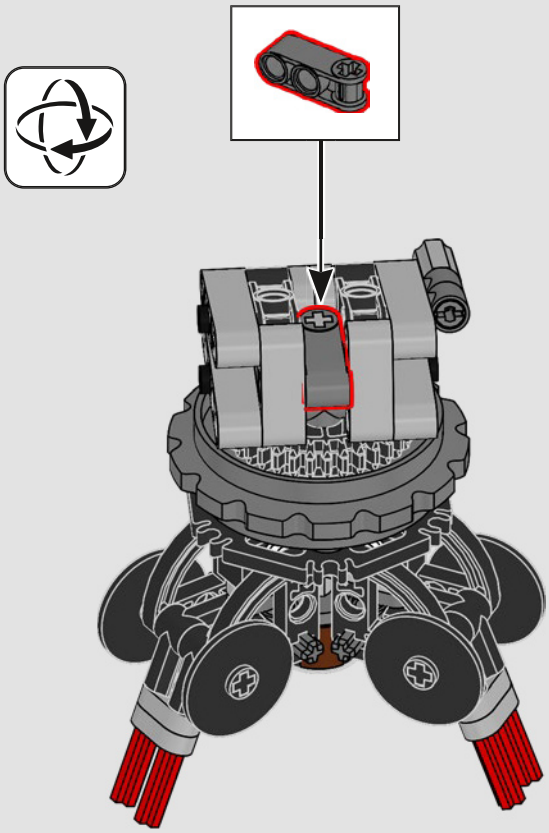

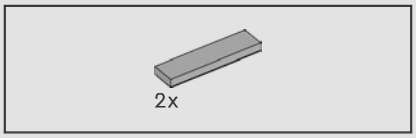

43

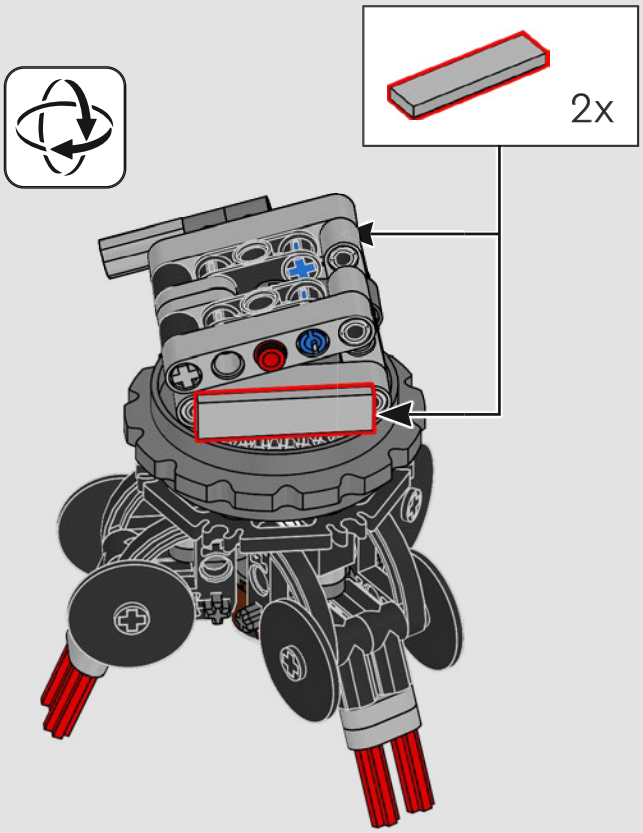

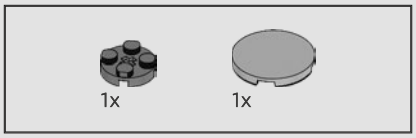

44

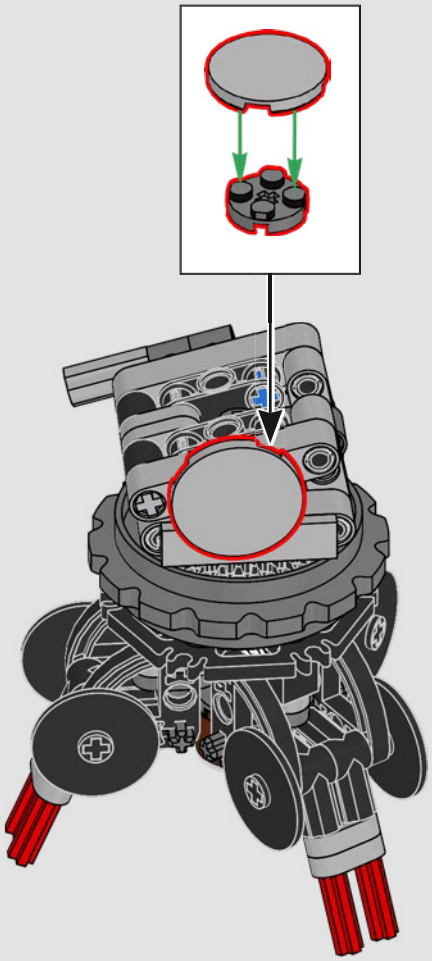

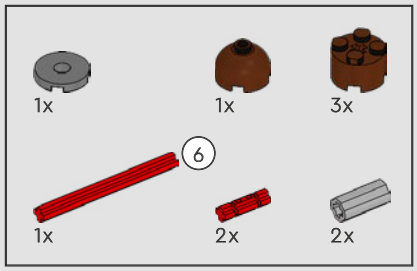

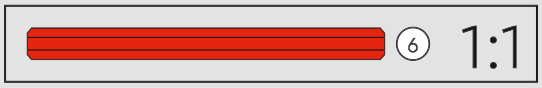

45

1

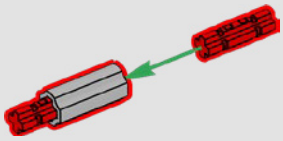

2

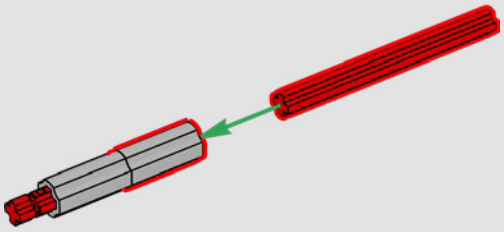

3

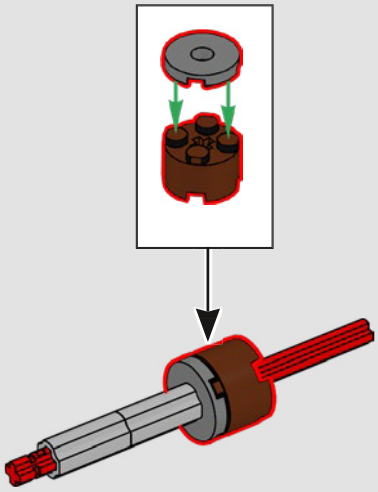

4

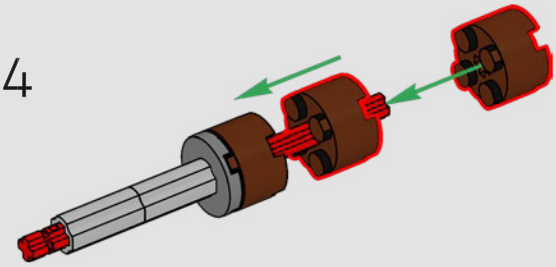

5

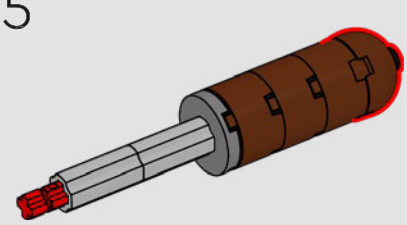

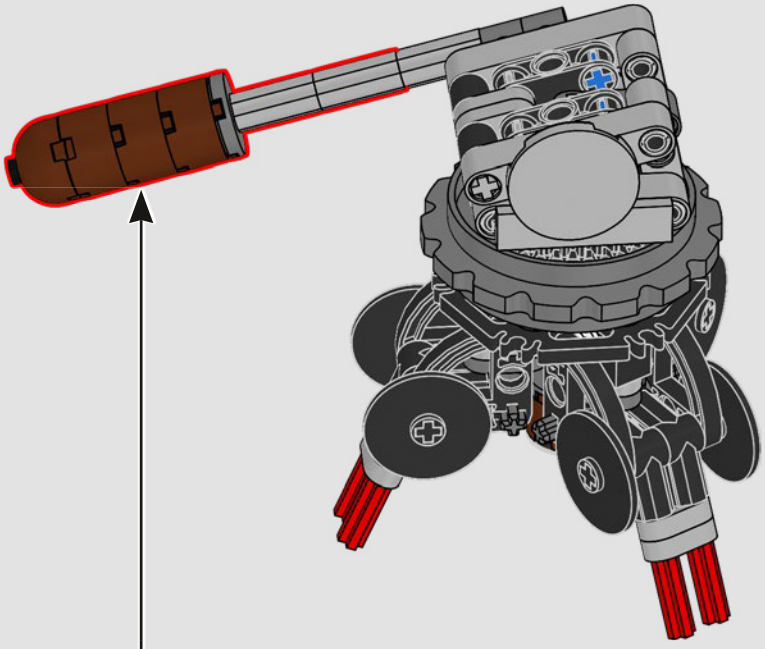

3

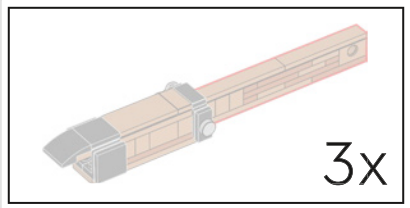

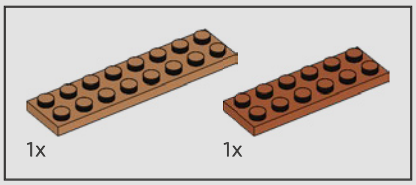

46

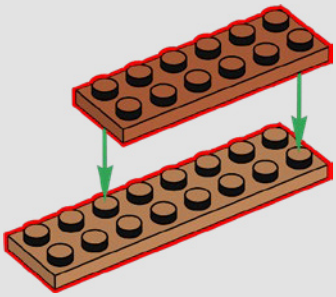

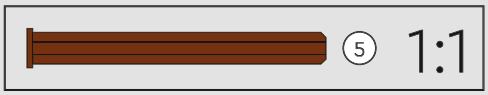

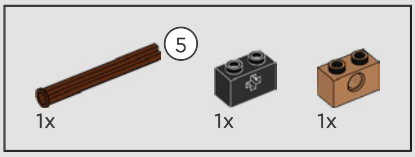

47

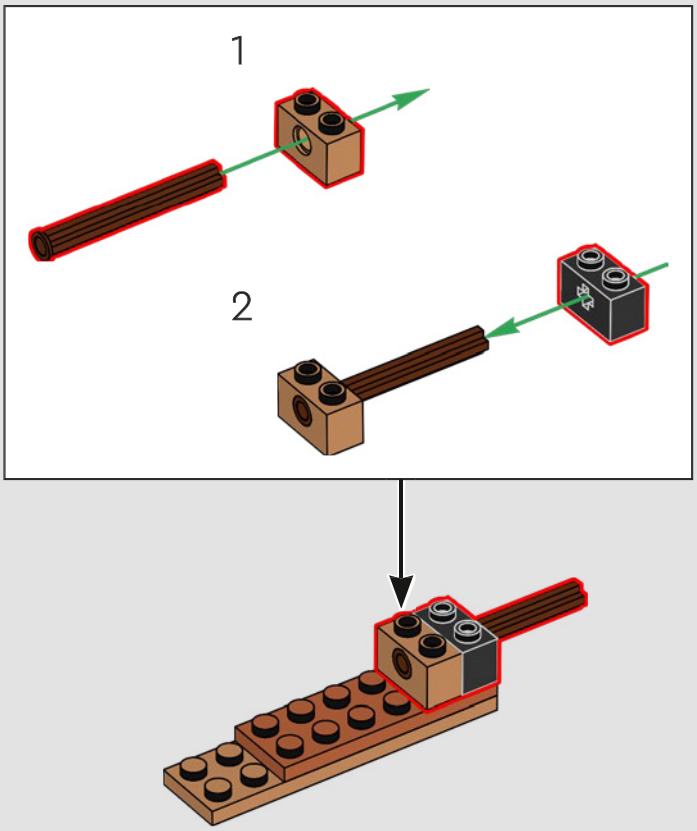

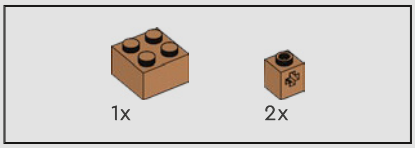

48

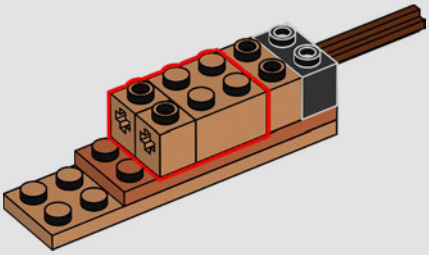

49

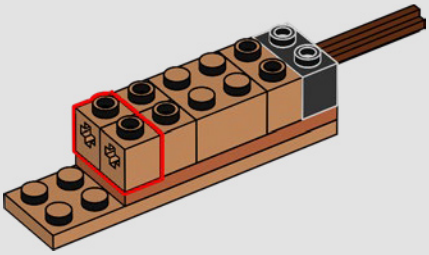

50

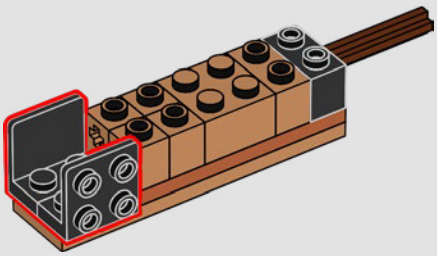

51

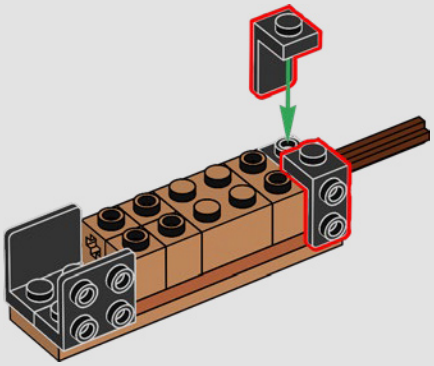

52

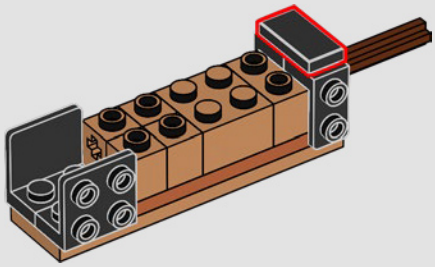

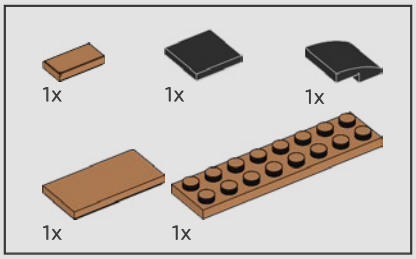

53

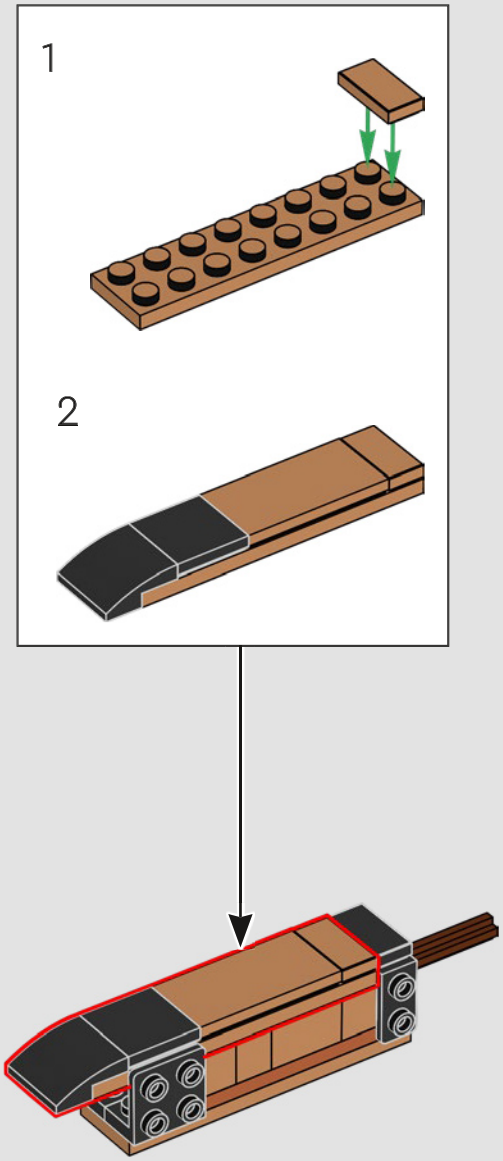

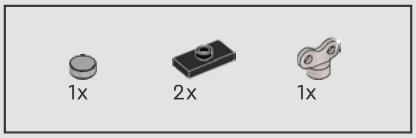

54

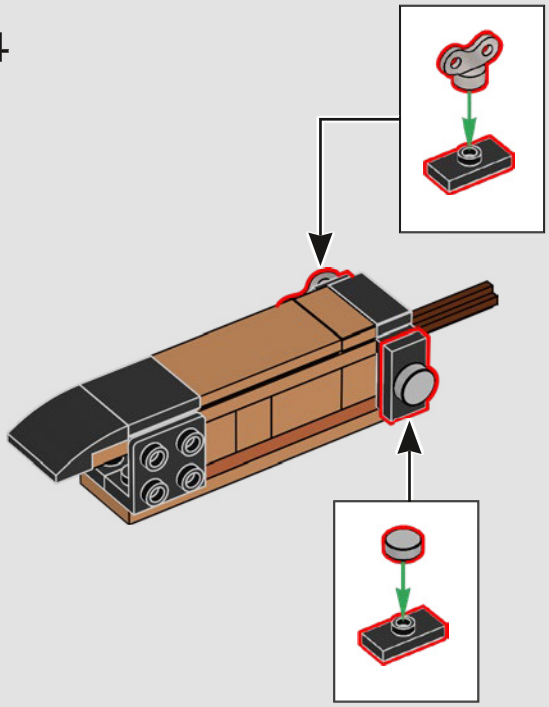

55

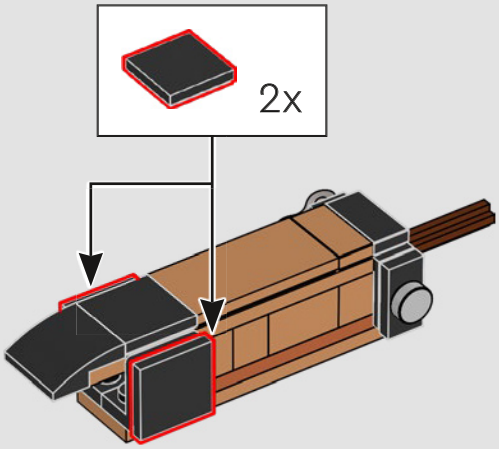

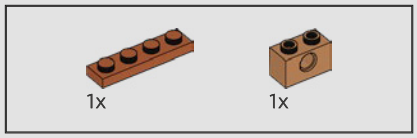

56

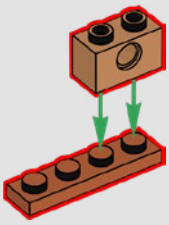

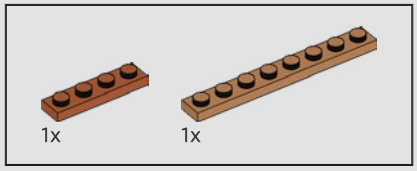

57

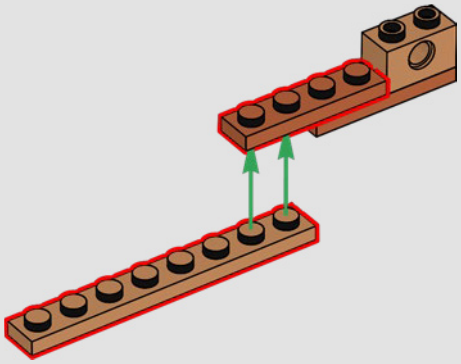

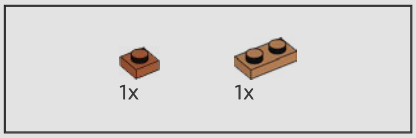

58

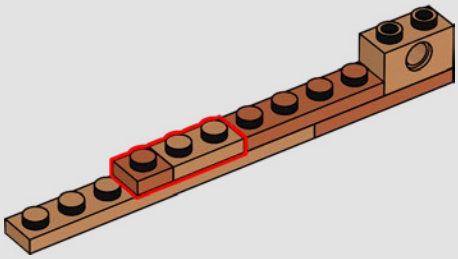

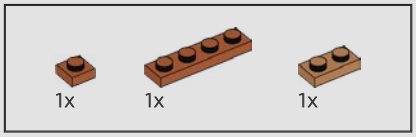

59

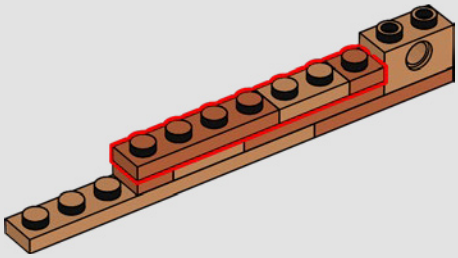

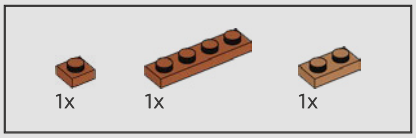

60

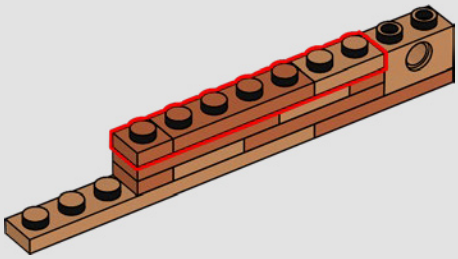

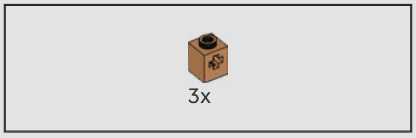

61

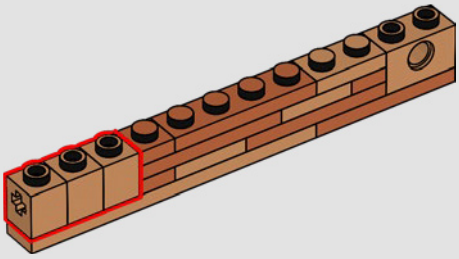

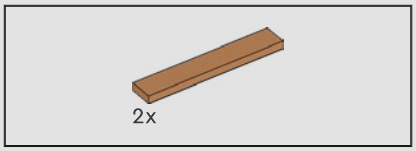

62

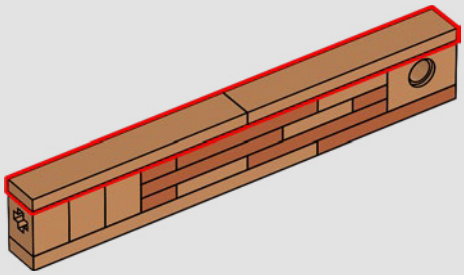

63

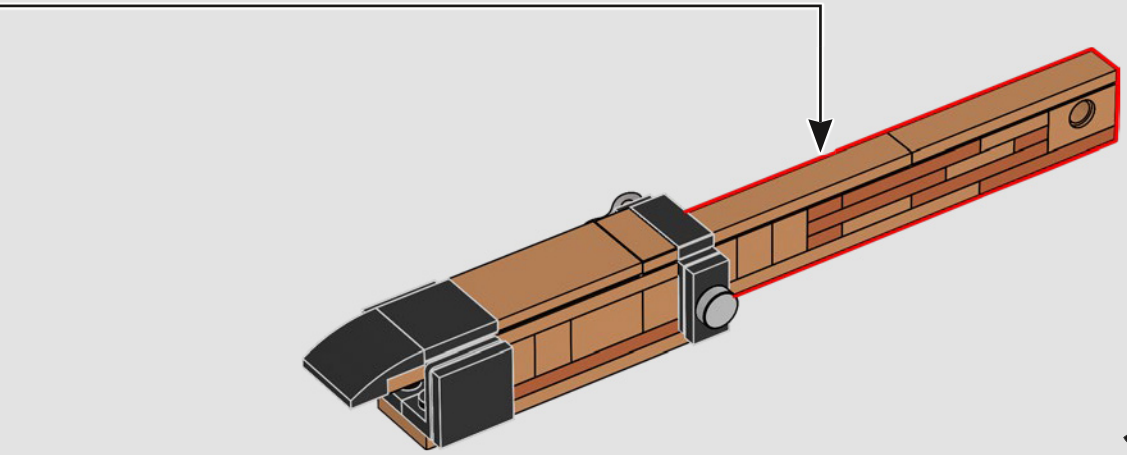

3x

64

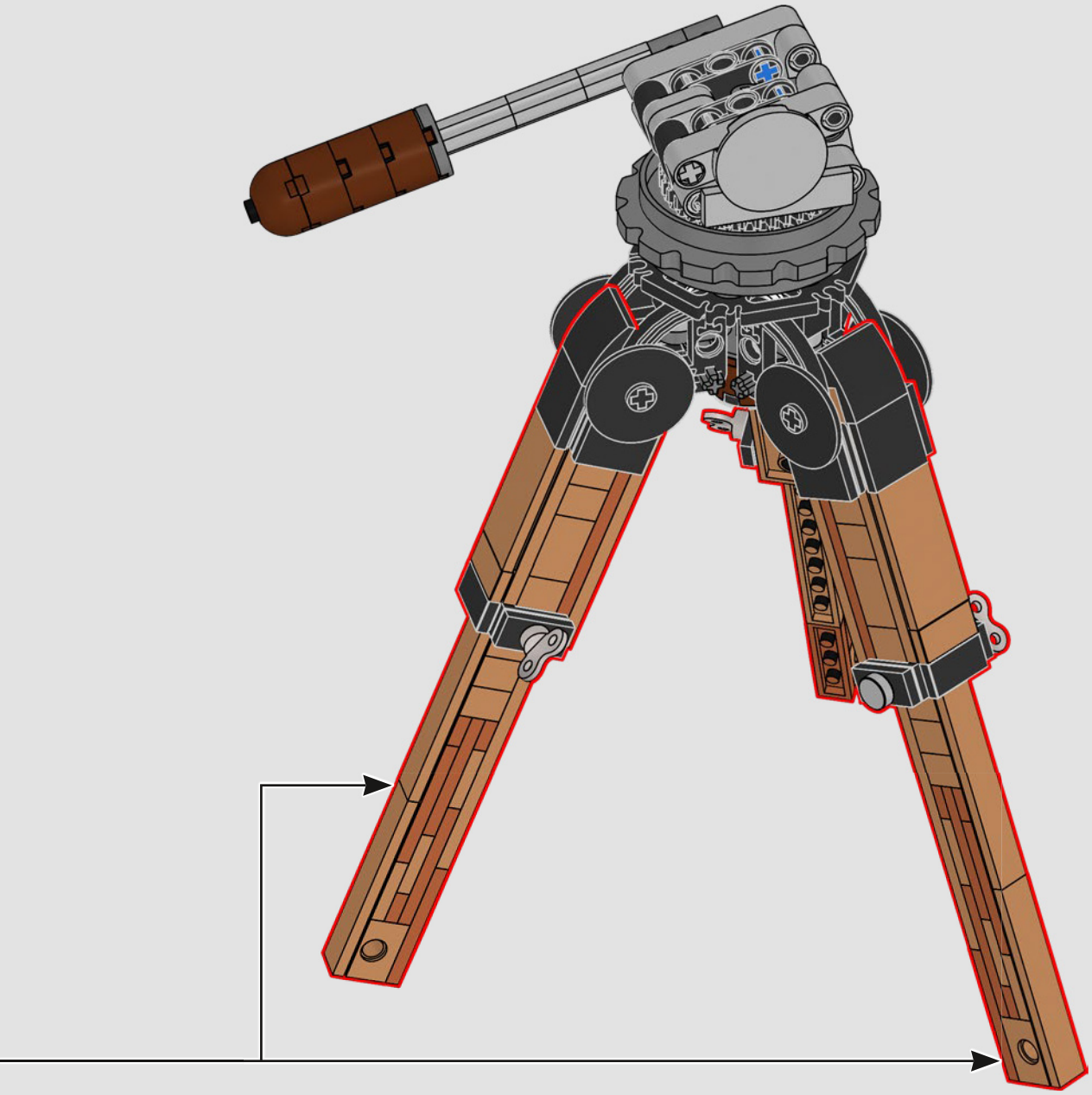

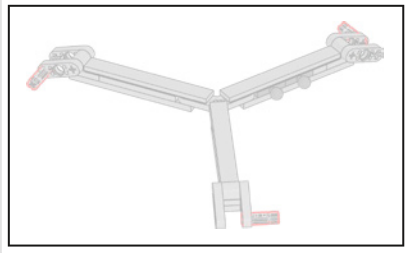

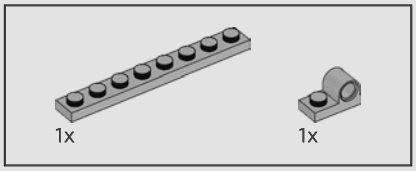

65

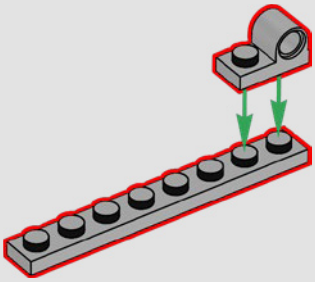

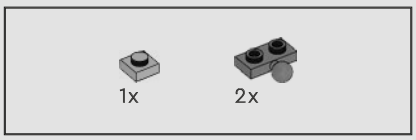

66

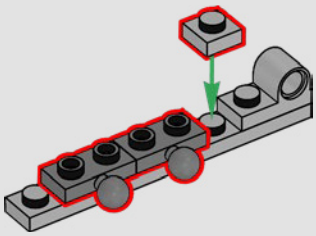

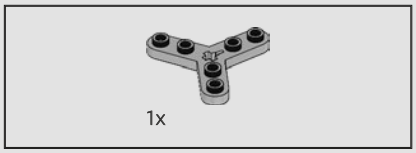

67

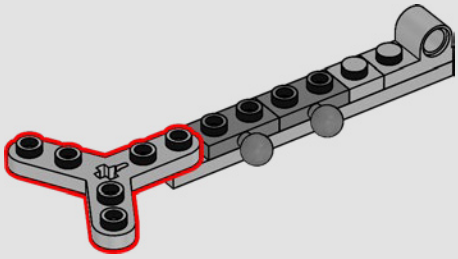

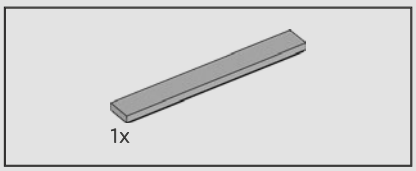

68

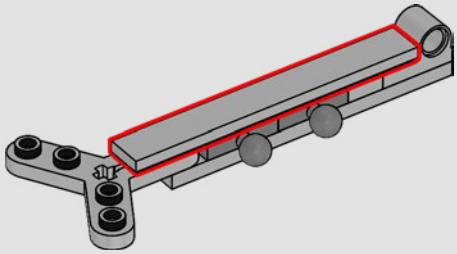

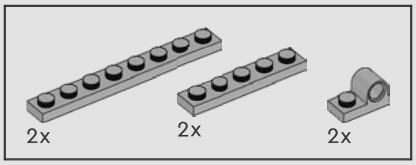

69

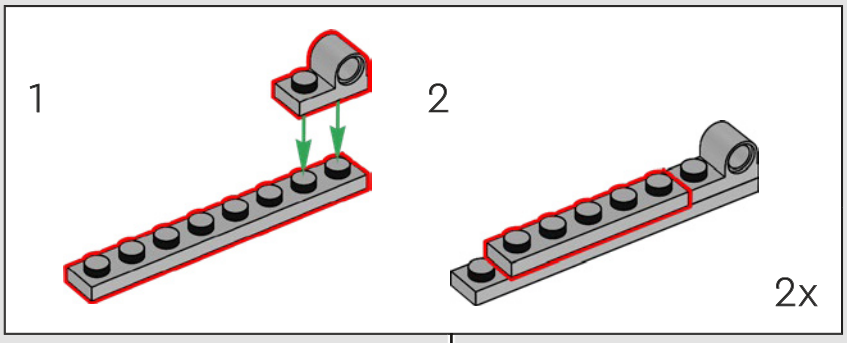

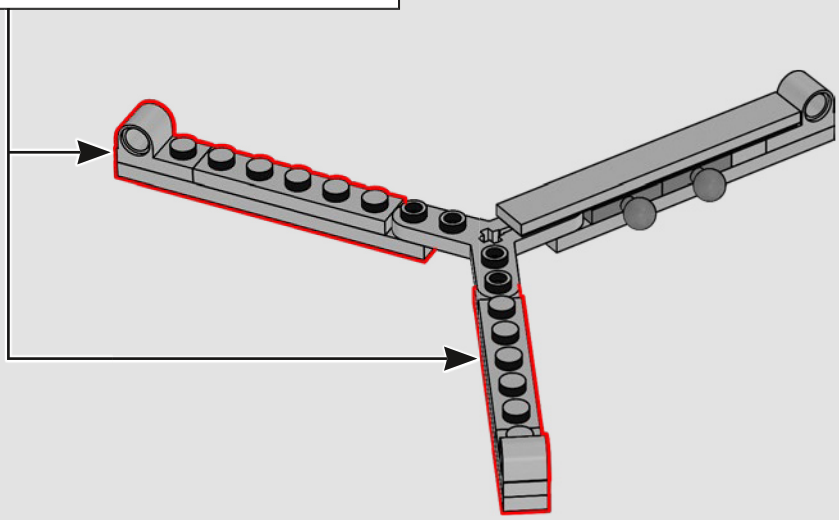

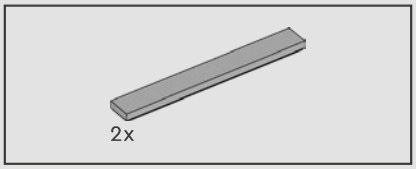

70

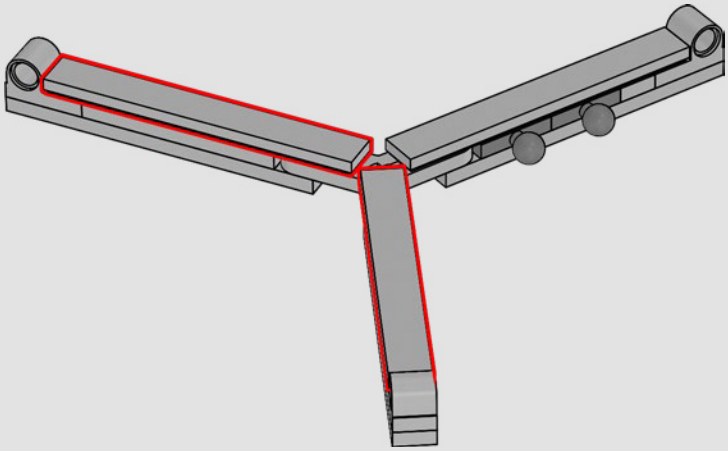

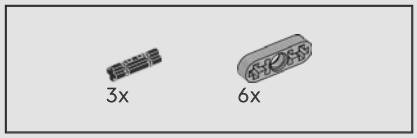

71

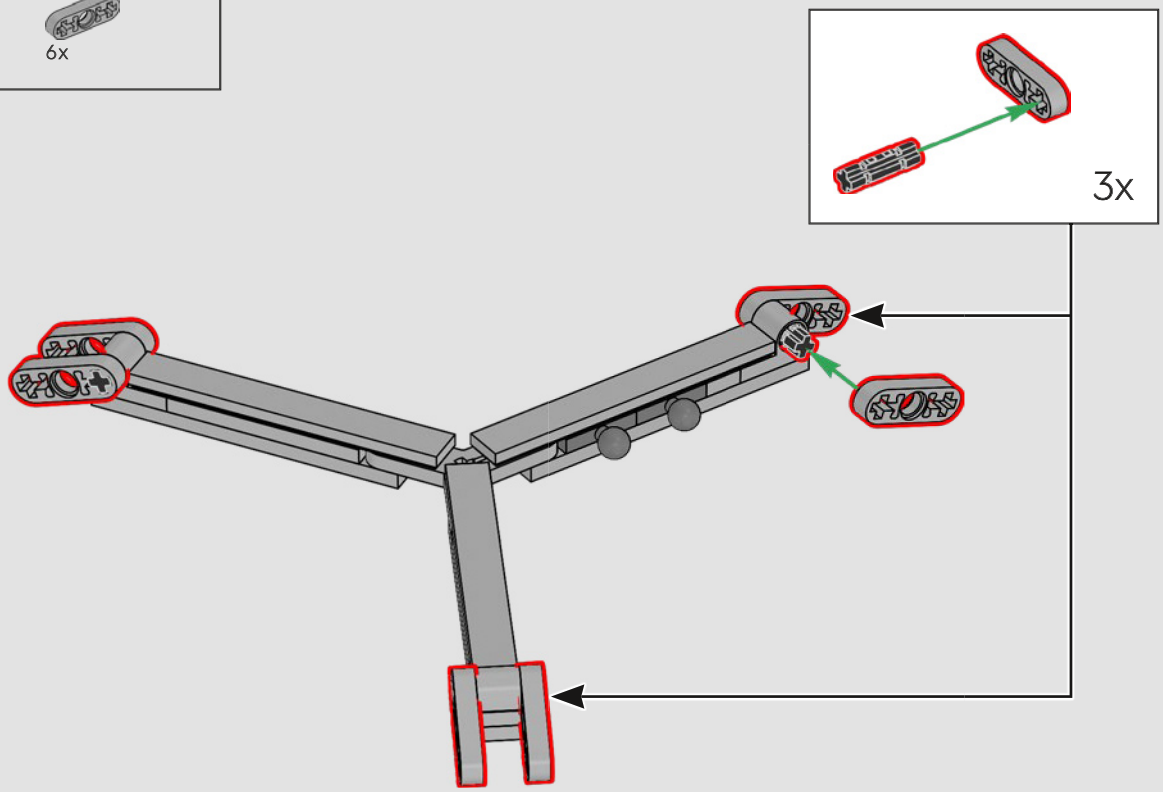

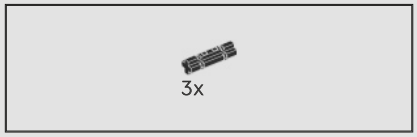

72

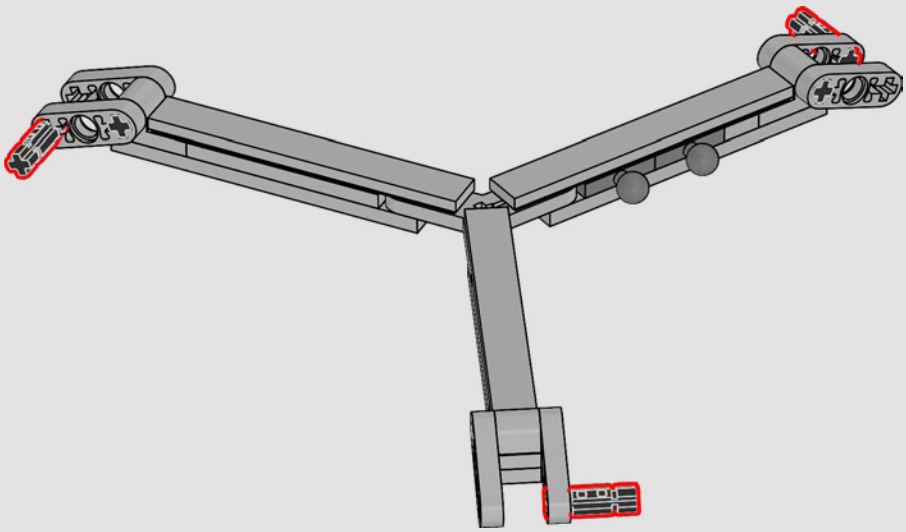

73

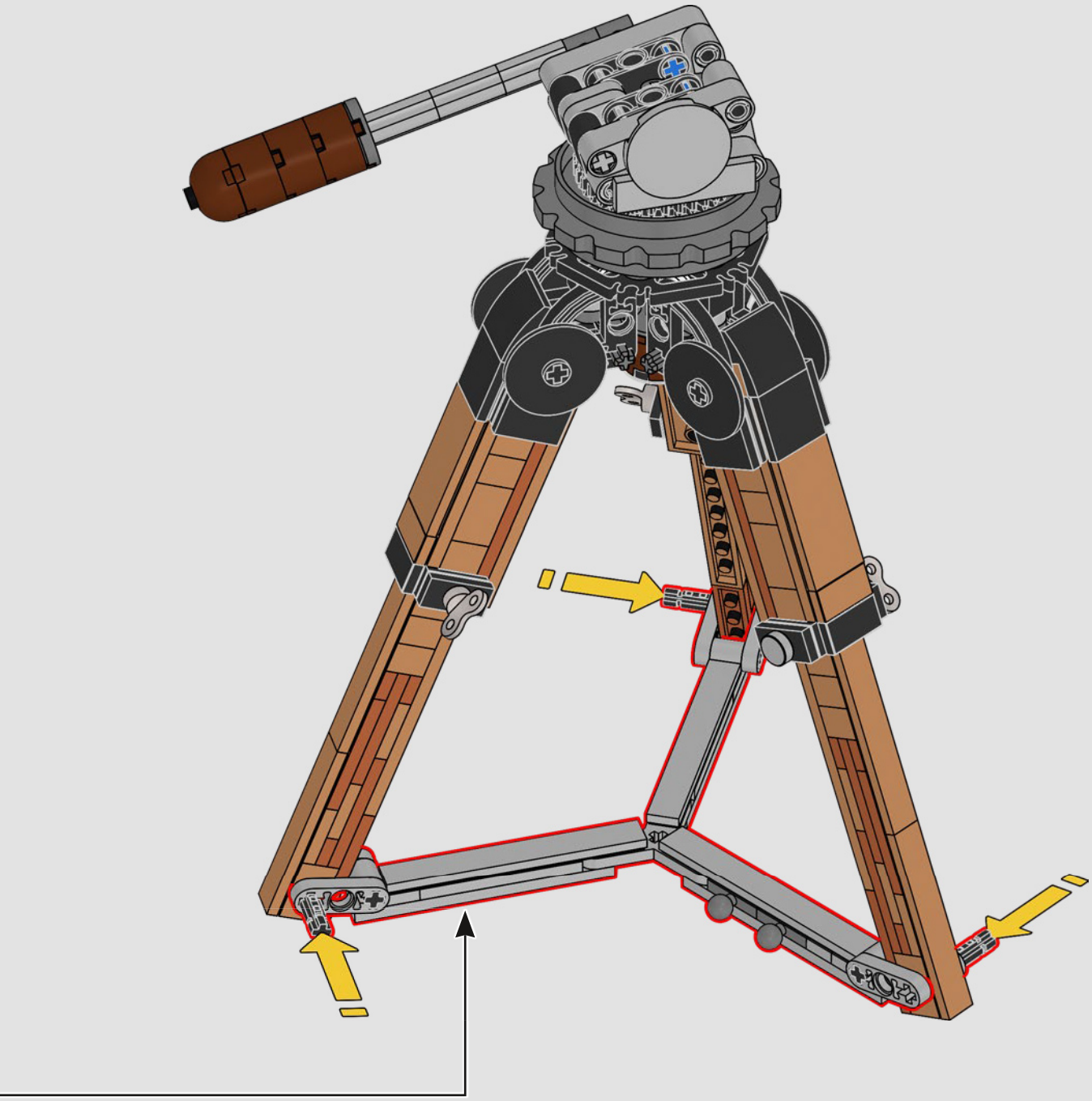

4

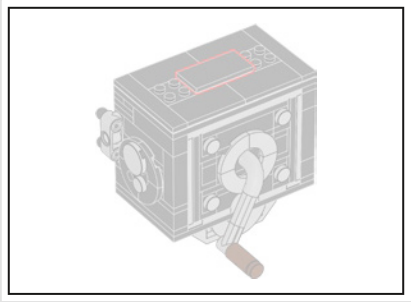

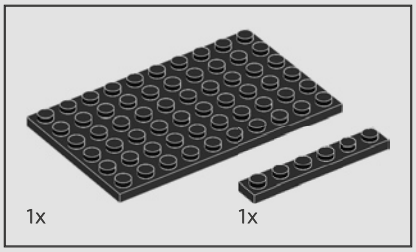

74

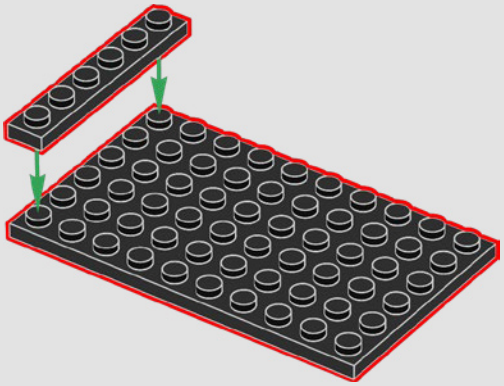

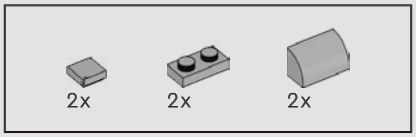

75

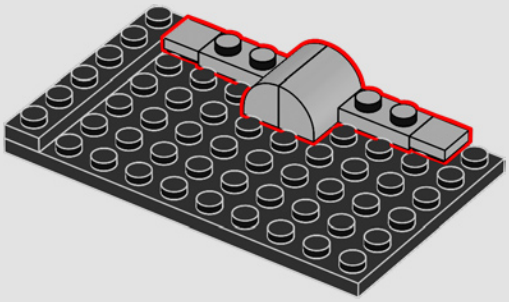

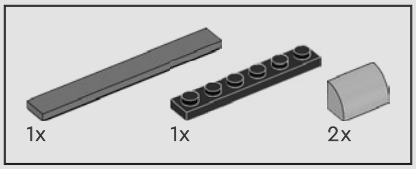

76

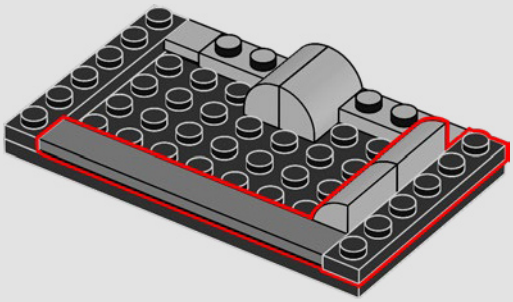

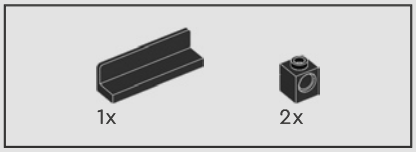

77

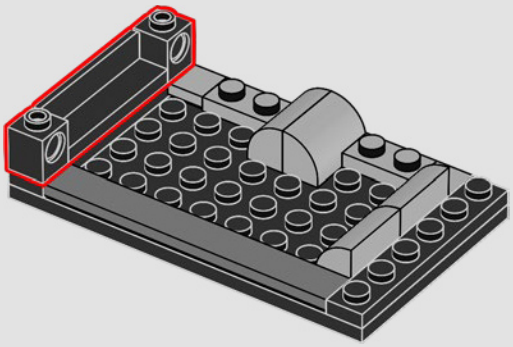

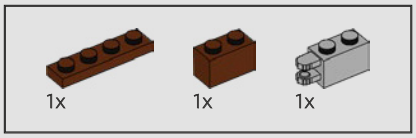

78

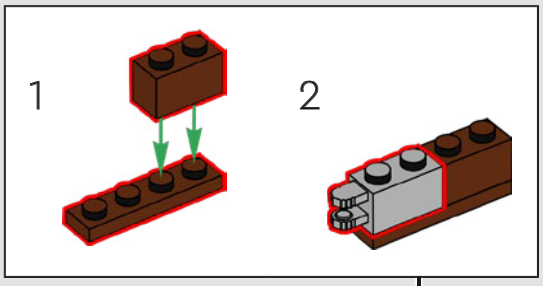

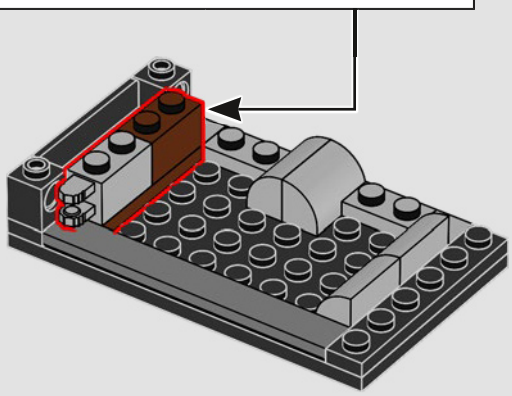

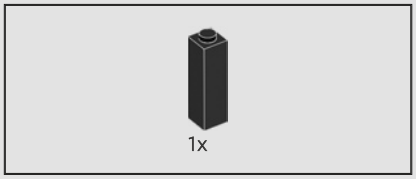

79

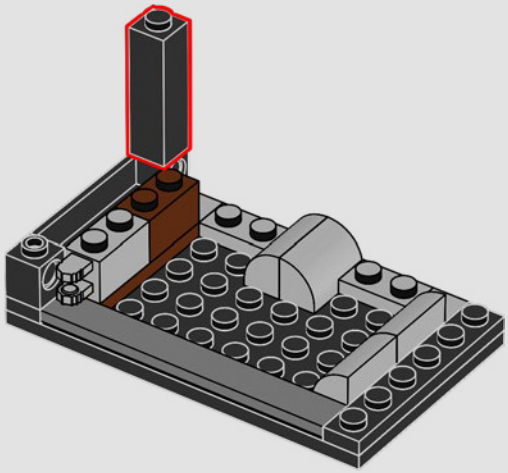

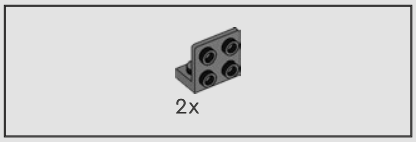

80

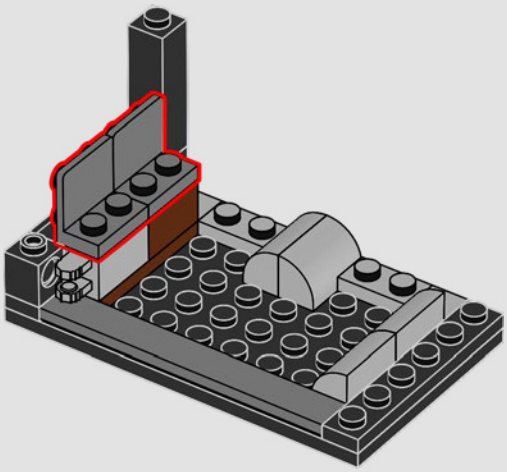

81

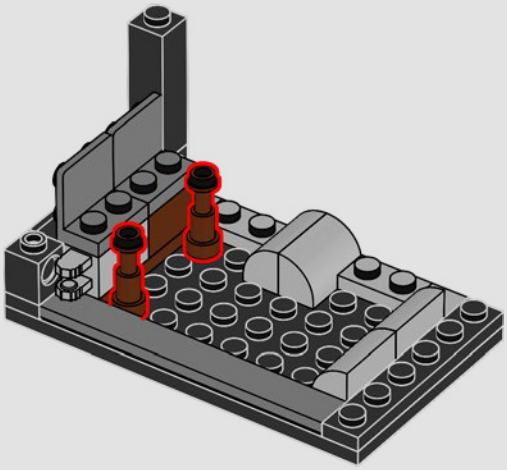

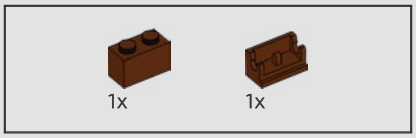

82

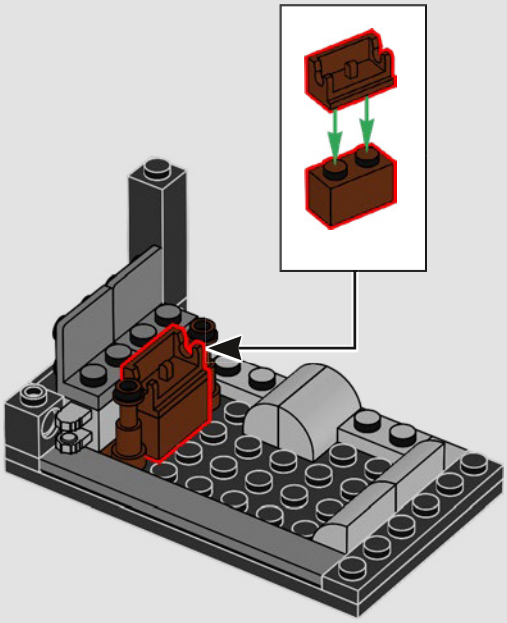

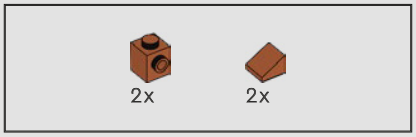

83

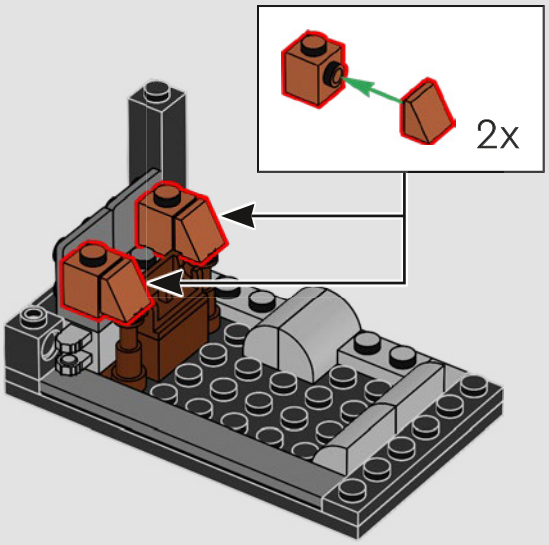

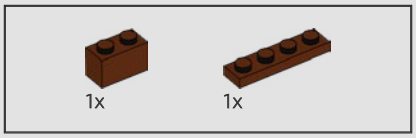

84

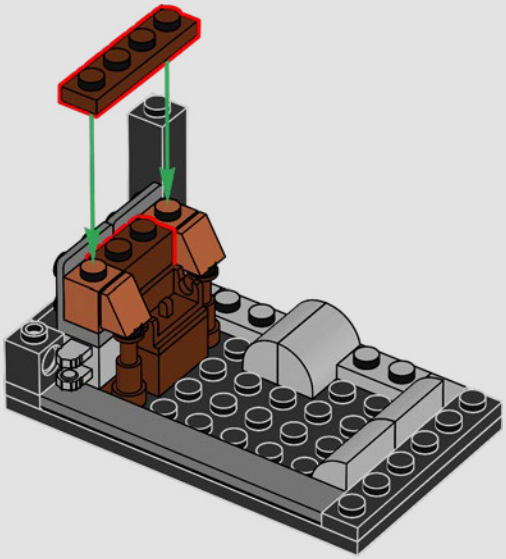

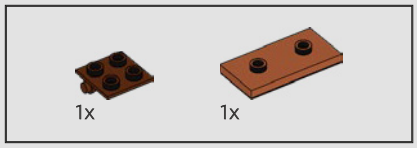

85

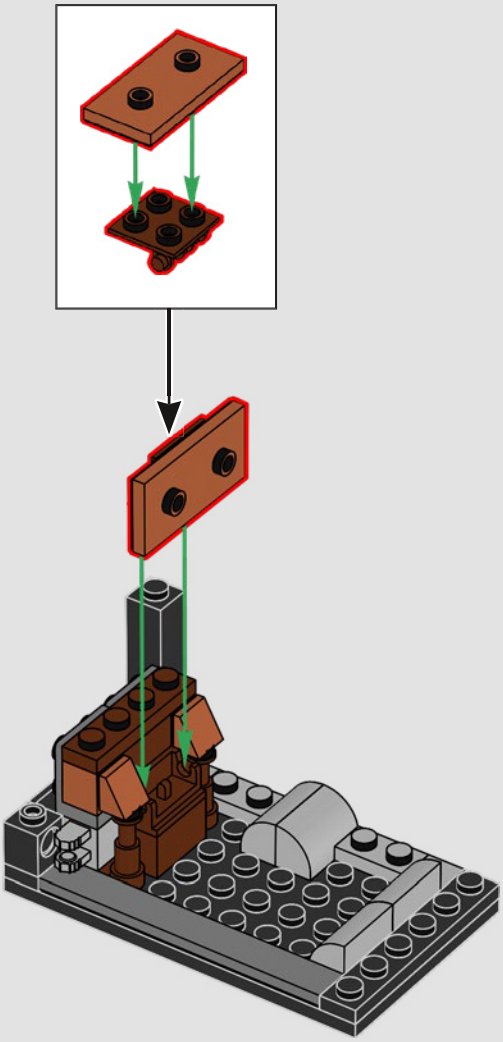

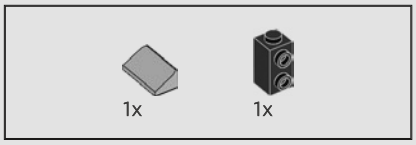

86

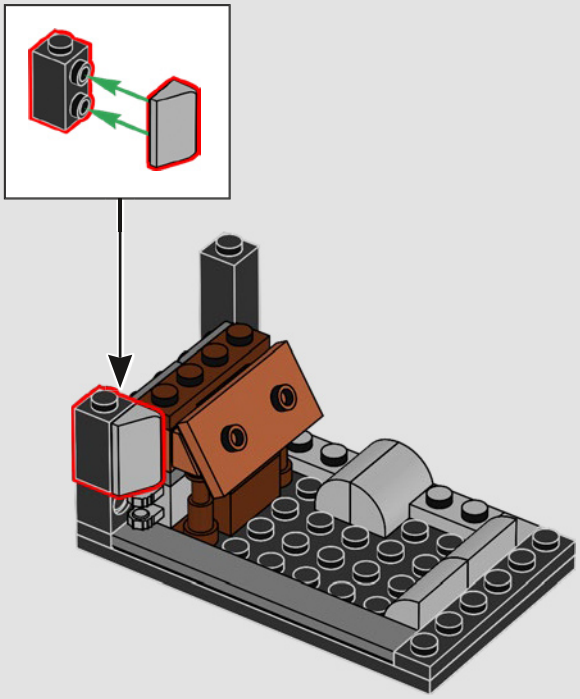

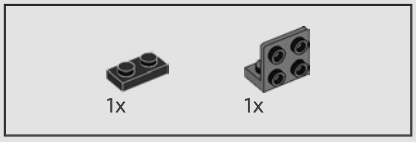

87

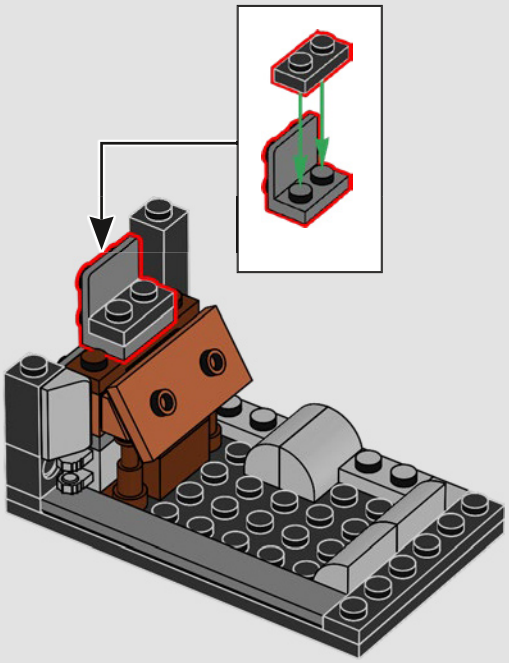

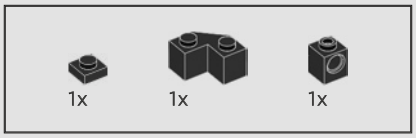

88

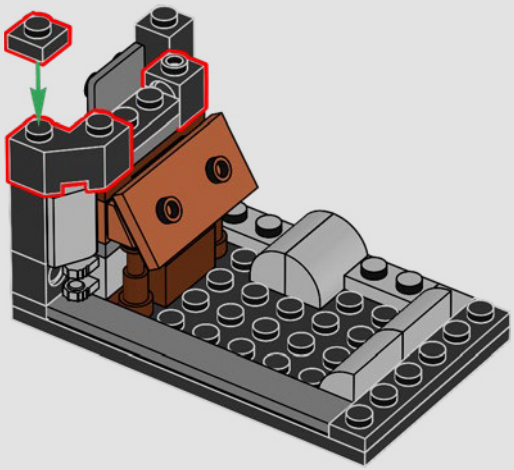

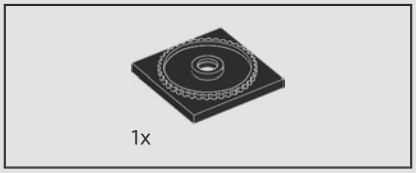

89

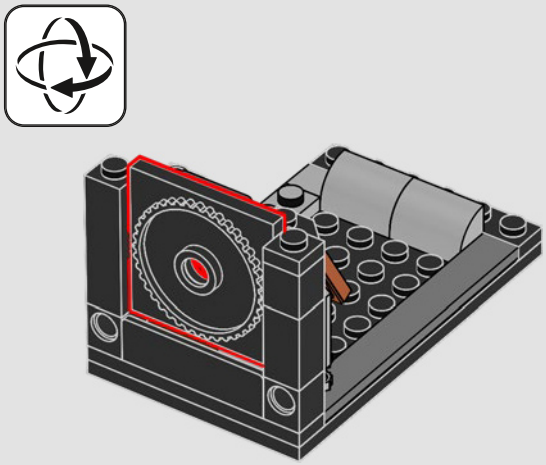

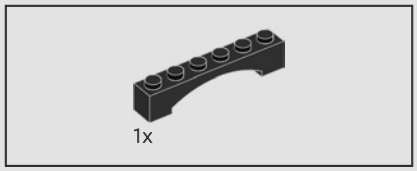

90

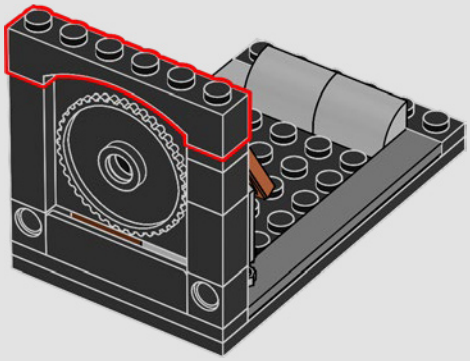

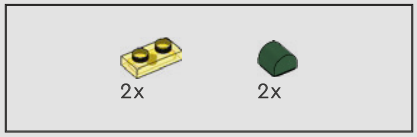

91

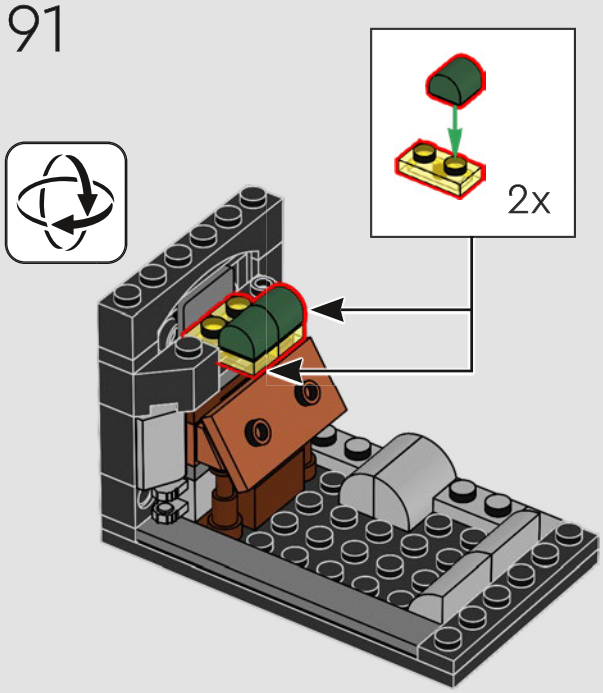

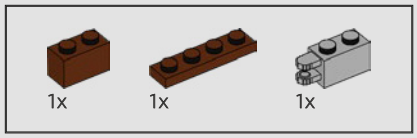

92

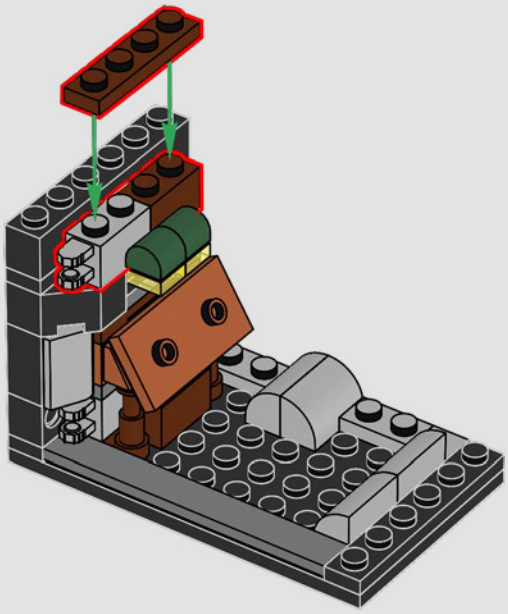

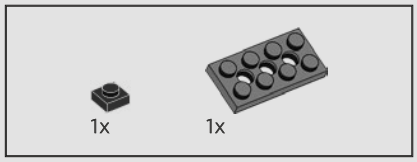

93

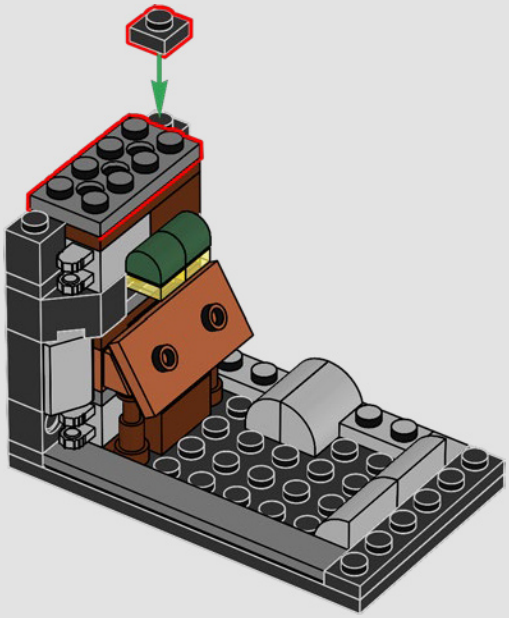

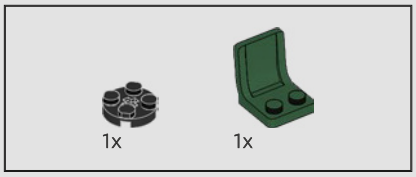

94

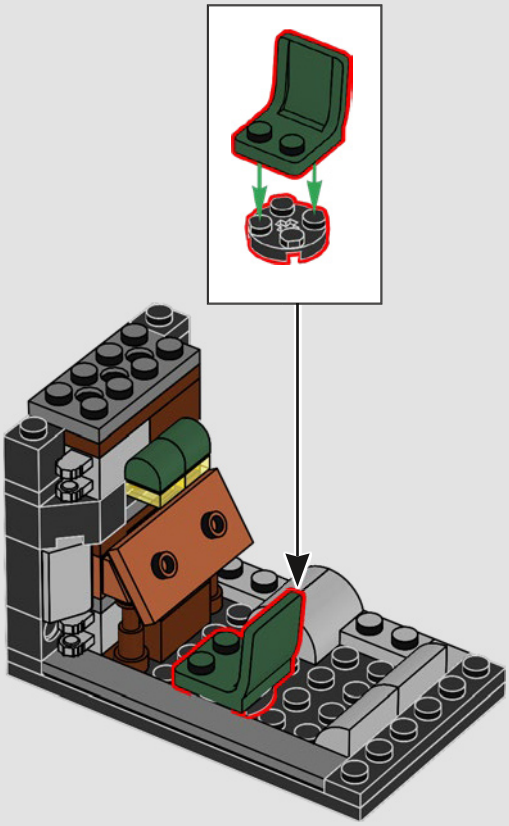

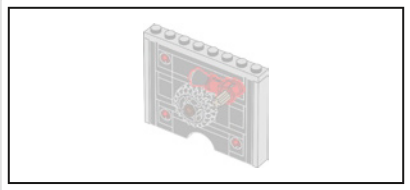

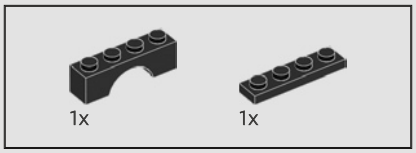

95

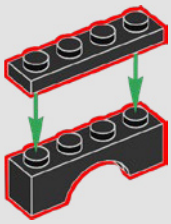

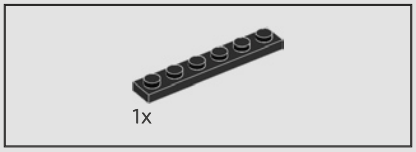

96

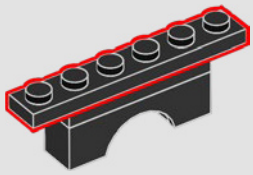

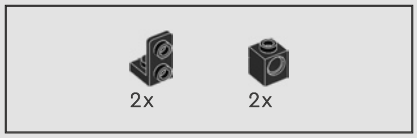

97

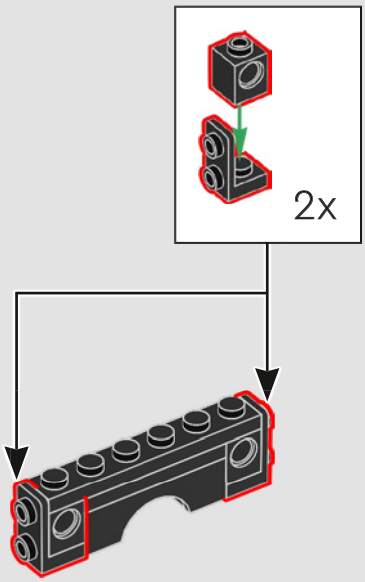

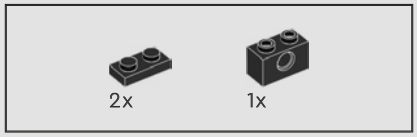

98

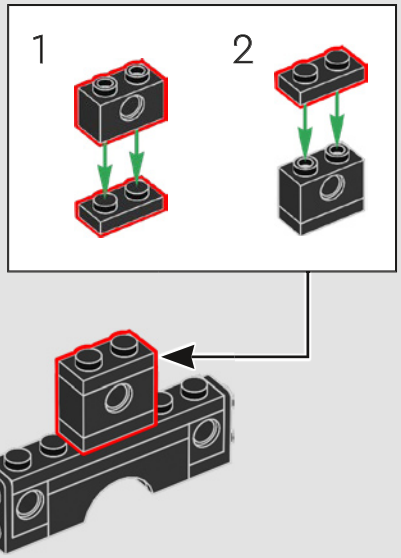

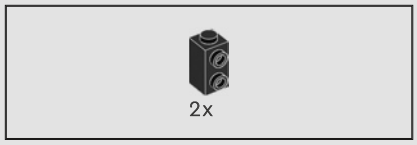

99

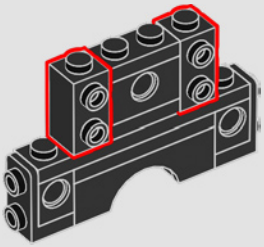

100

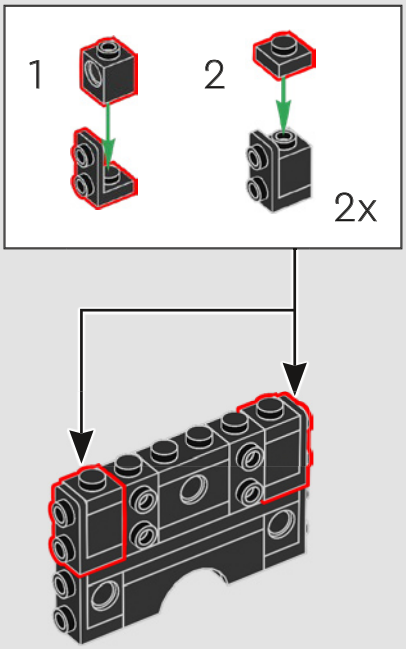

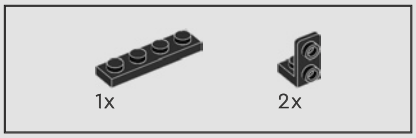

101

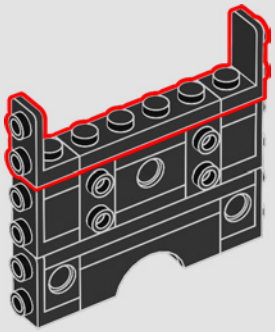

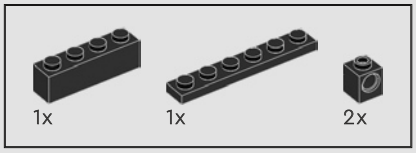

102

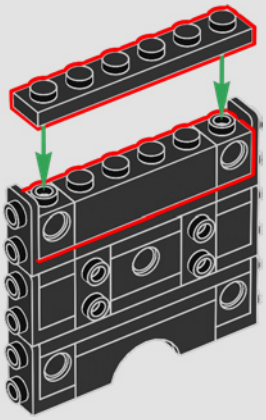

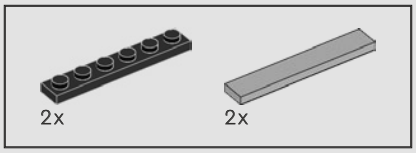

103

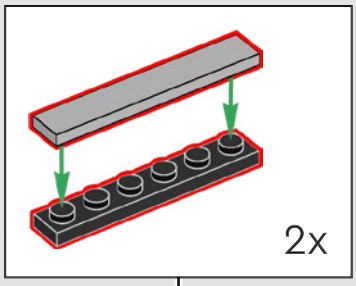

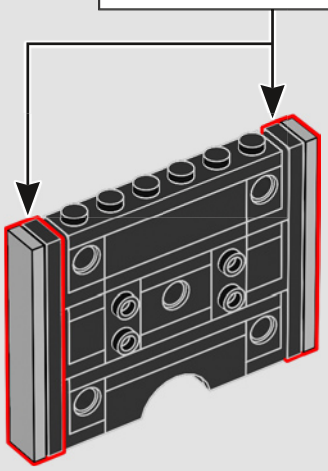

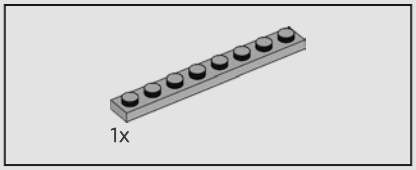

104

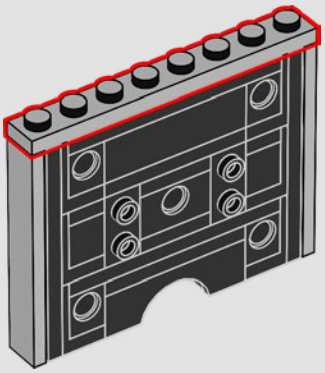

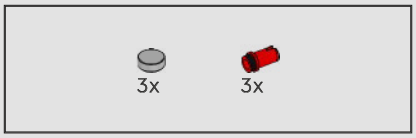

105

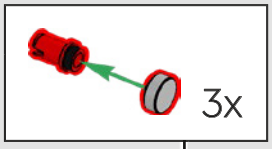

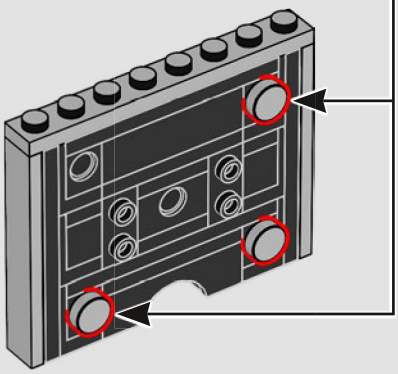

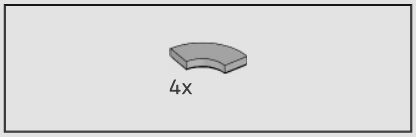

106

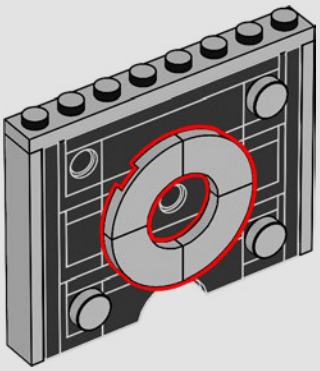

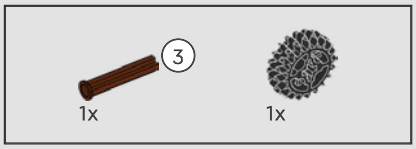

107

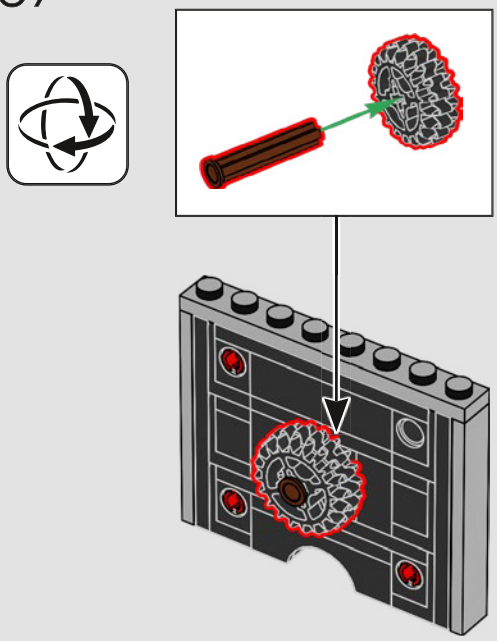

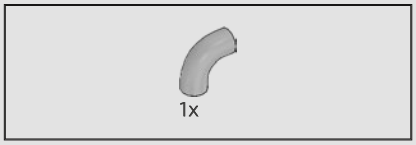

108

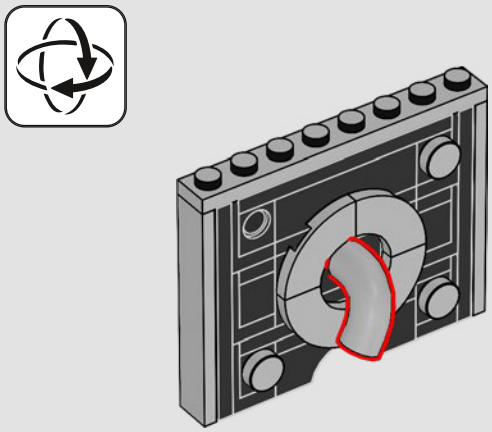

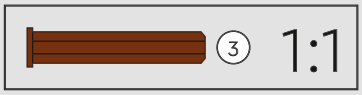

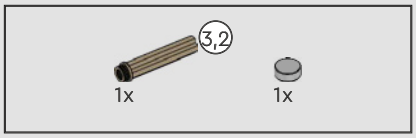

109

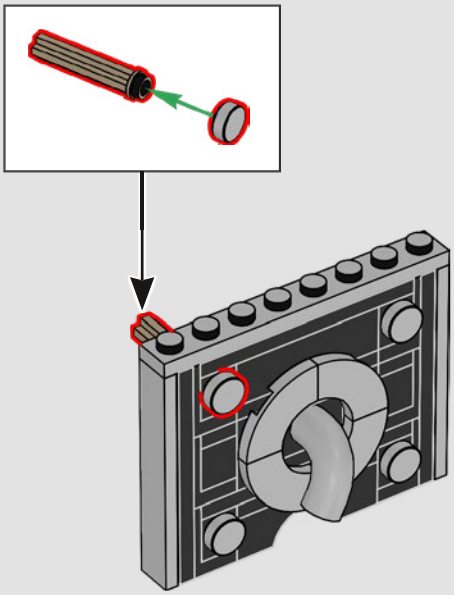

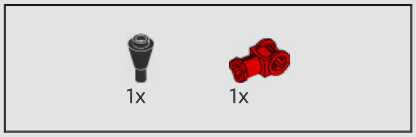

110

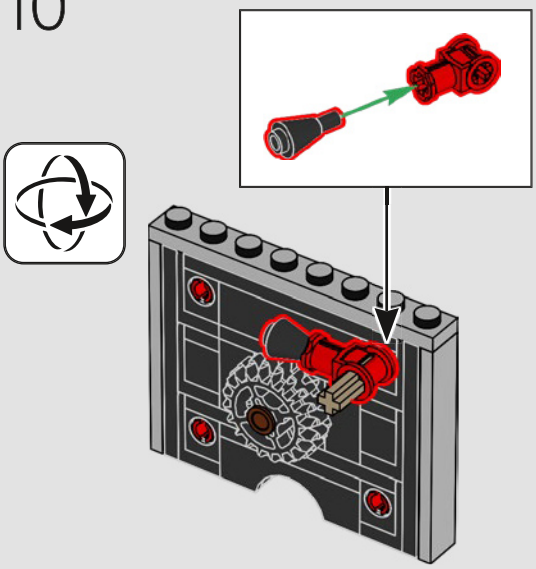

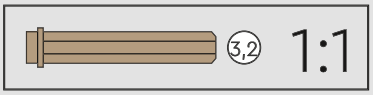

111

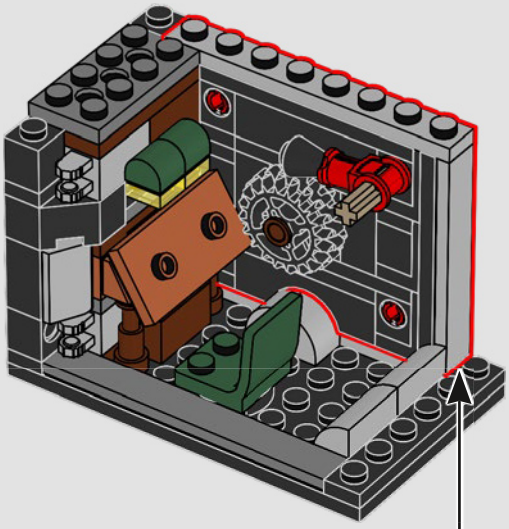

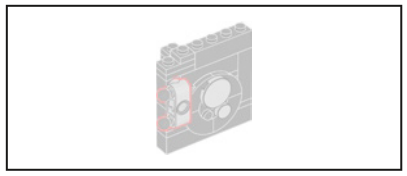

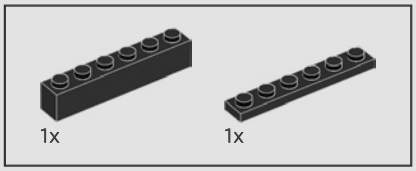

112

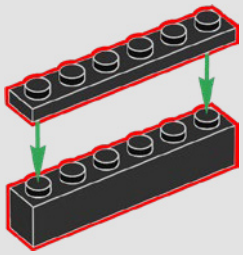

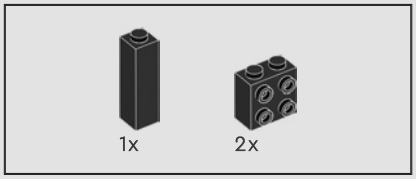

113

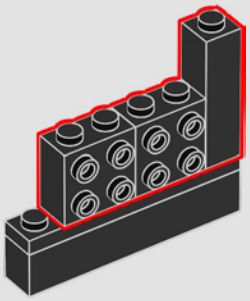

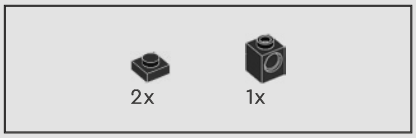

114

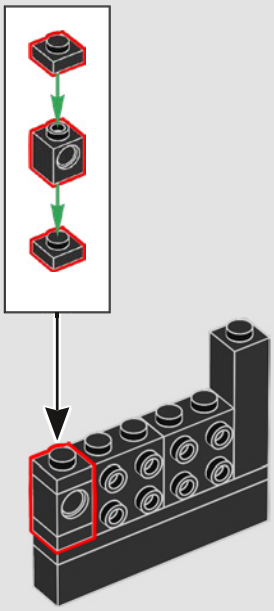

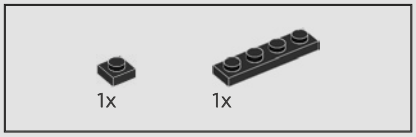

115

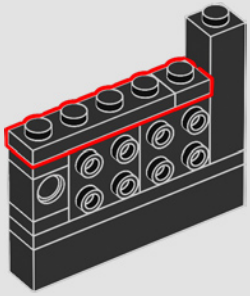

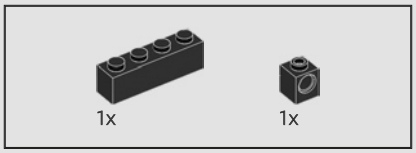

116

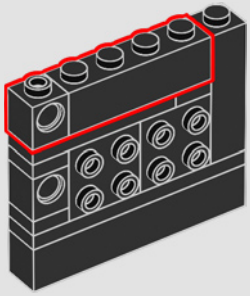

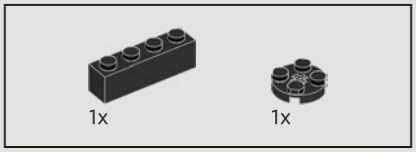

117

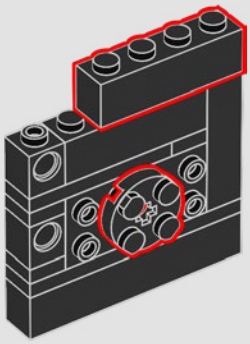

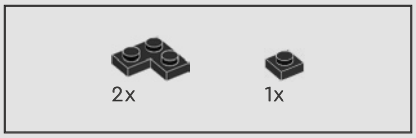

118

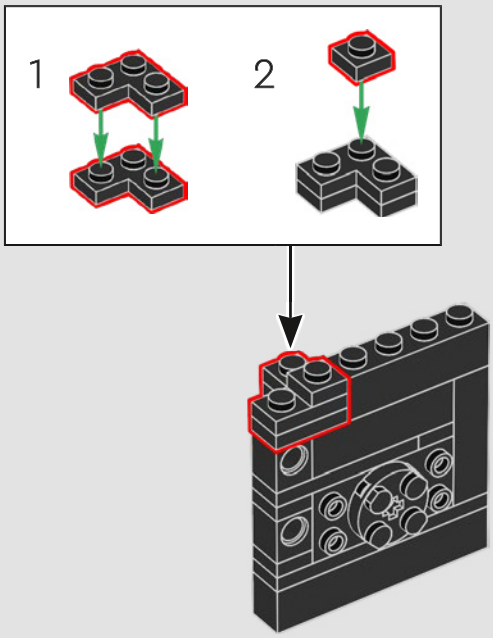

119

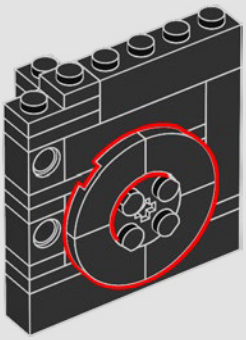

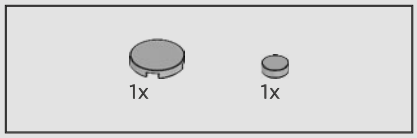

120

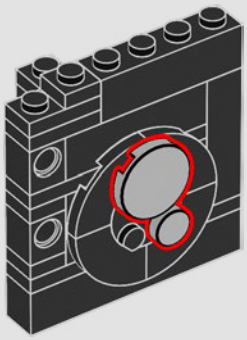

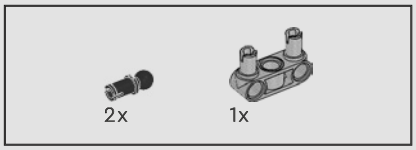

121

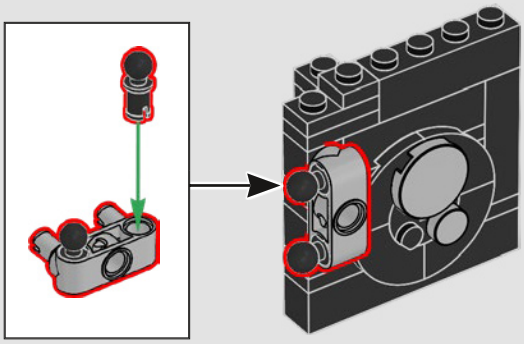

122

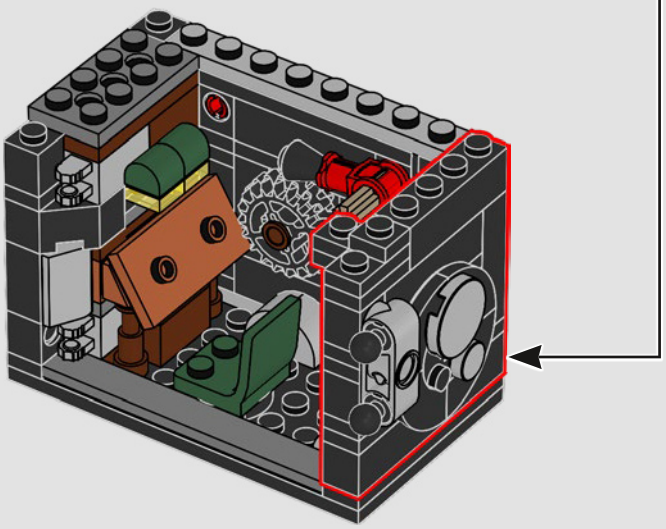

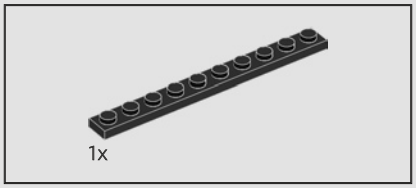

123

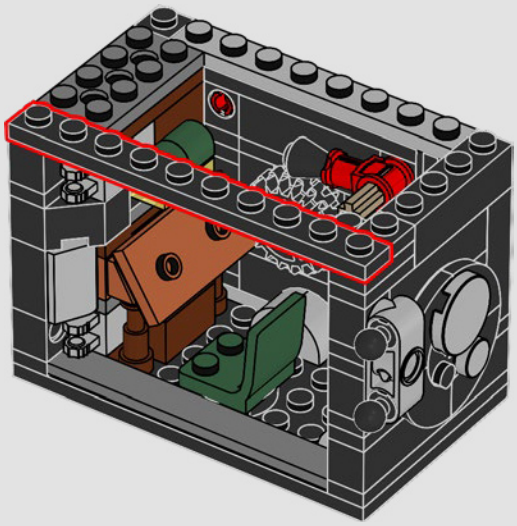

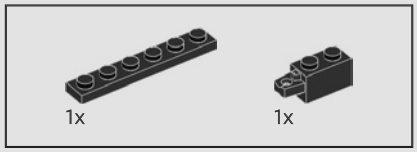

124

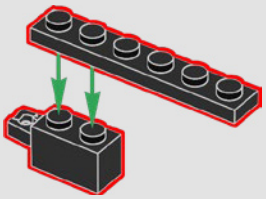

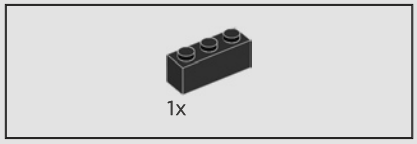

125

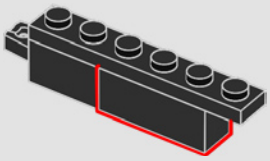

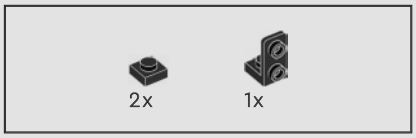

126

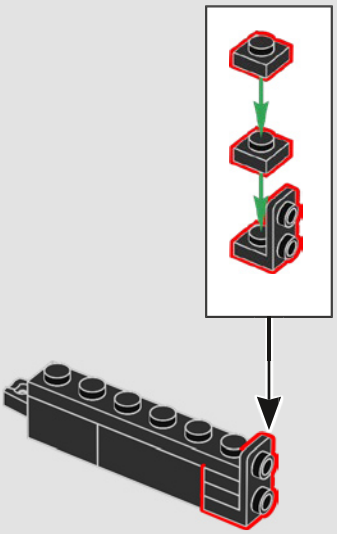

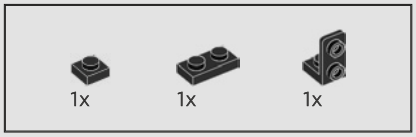

127

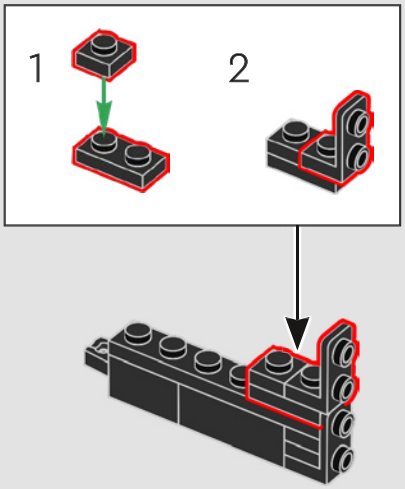

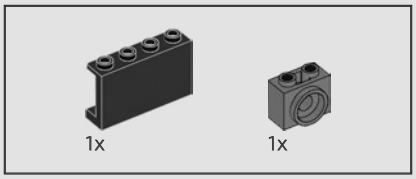

128

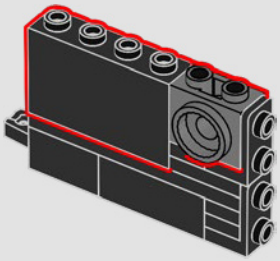

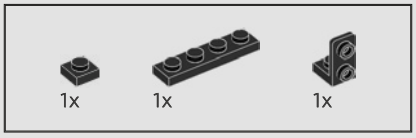

129

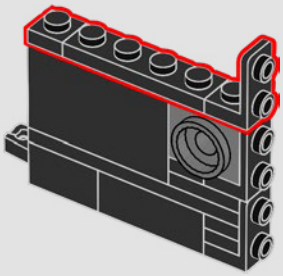

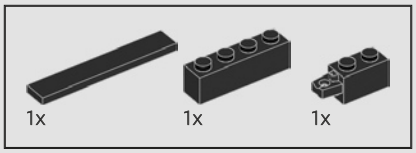

130

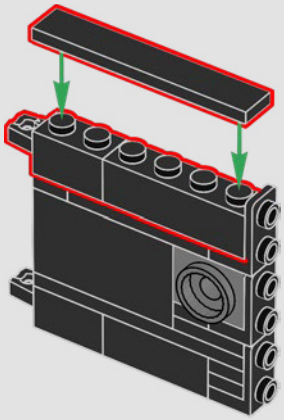

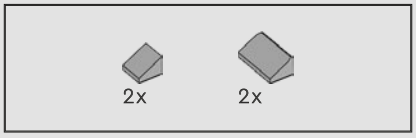

131

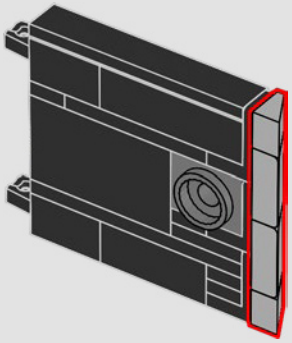

132

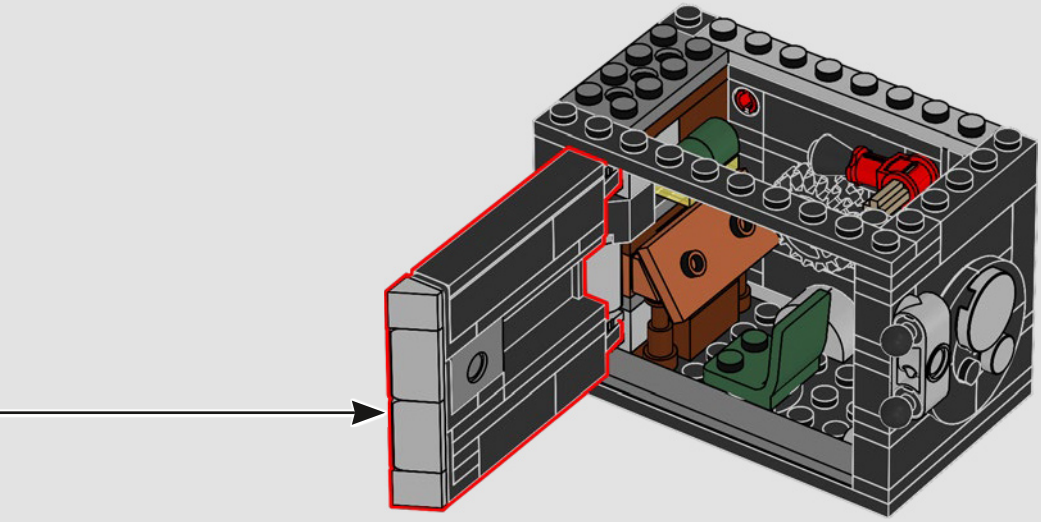

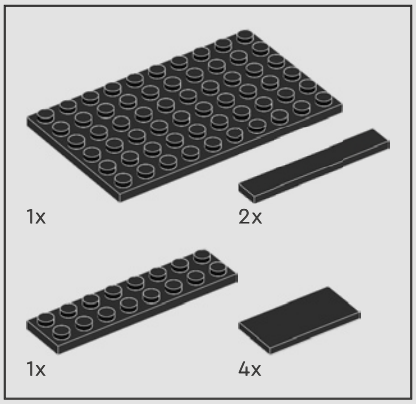

133

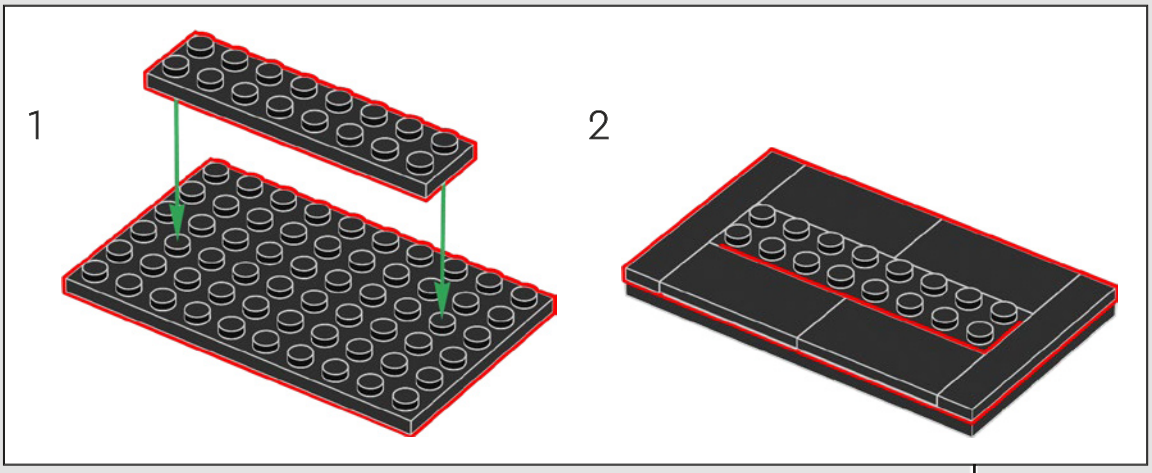

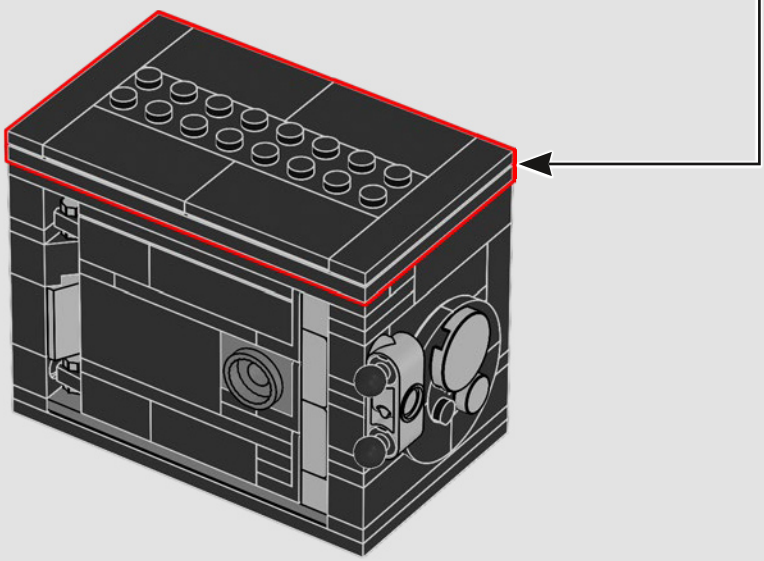

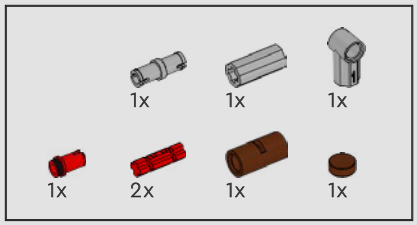

134

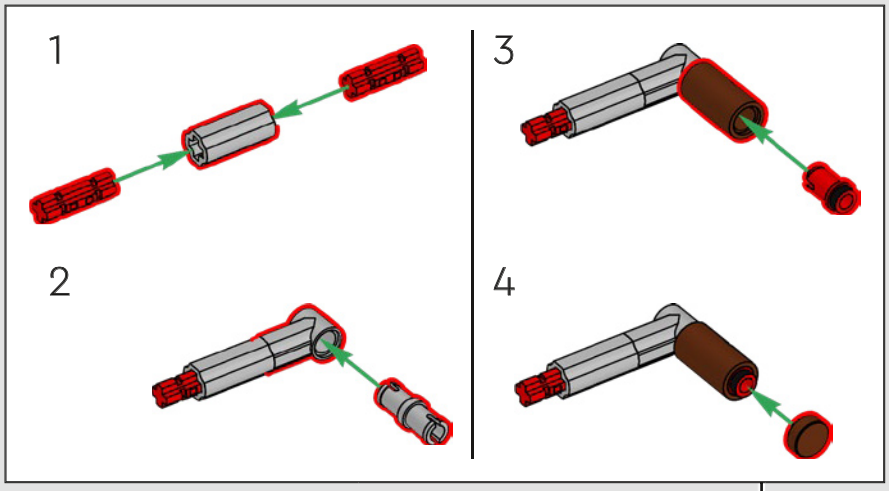

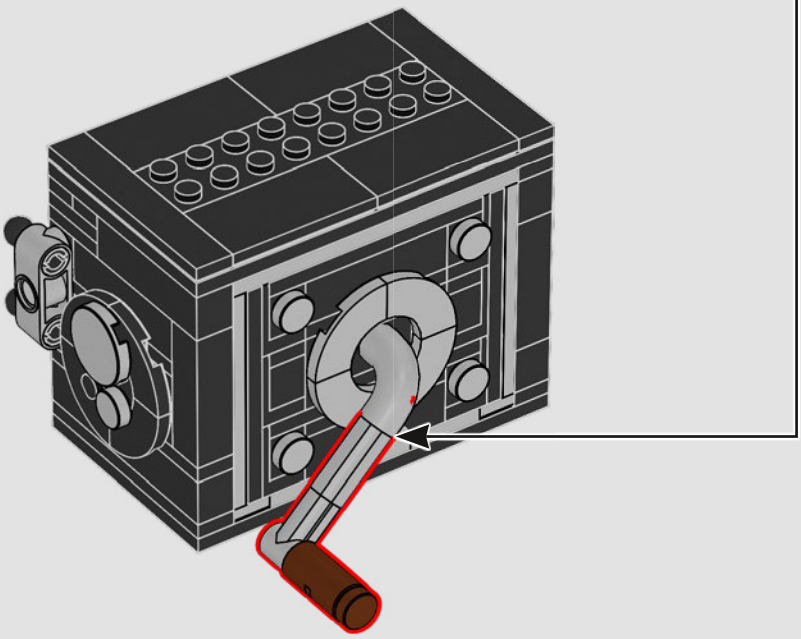

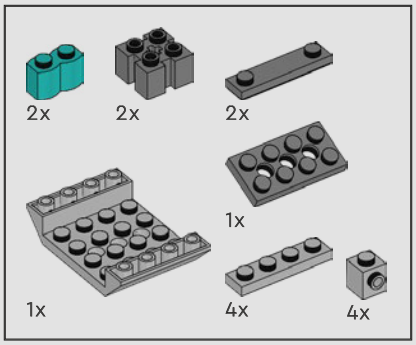

135

1

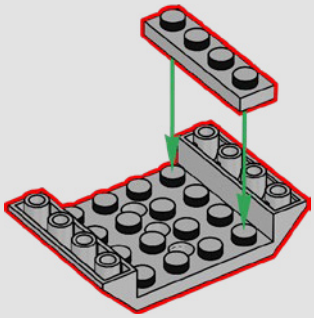

2

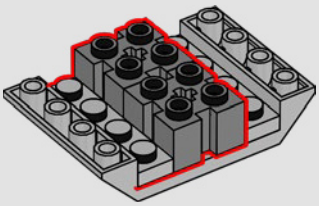

3

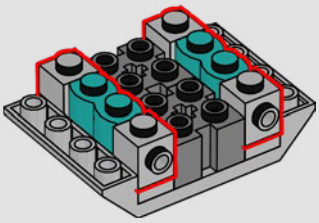

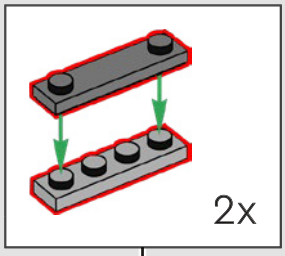

4

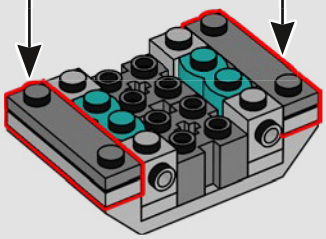

5

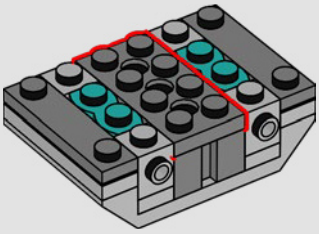

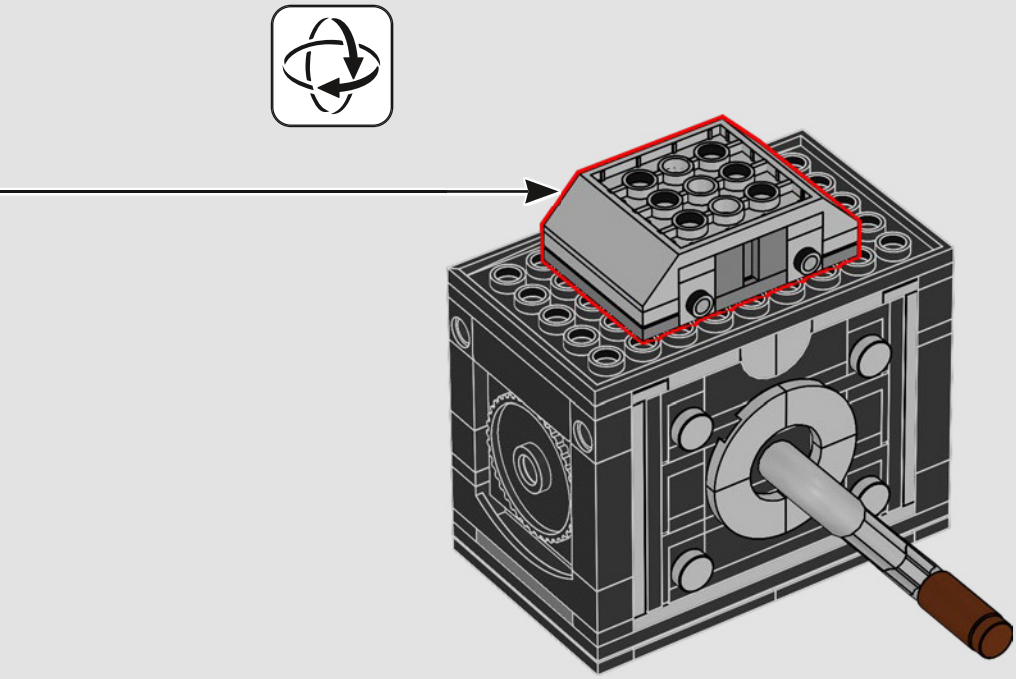

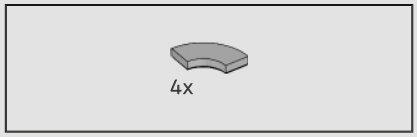

136

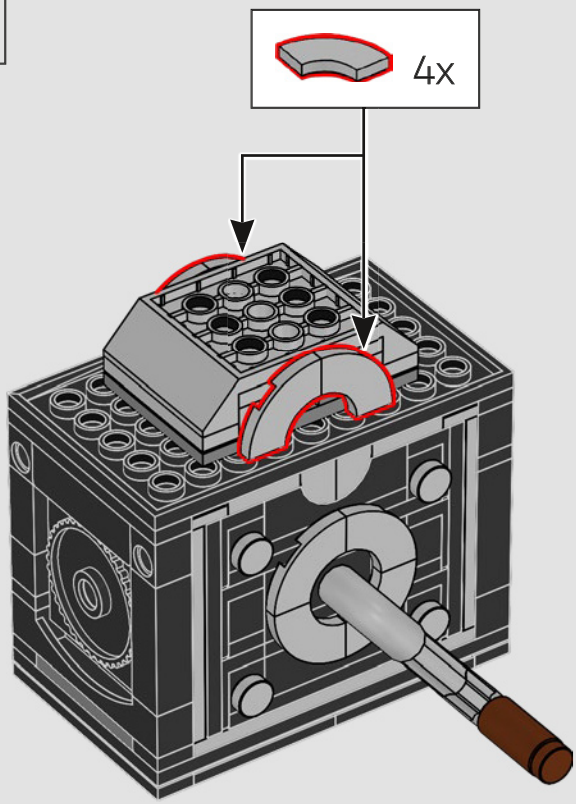

2x

137

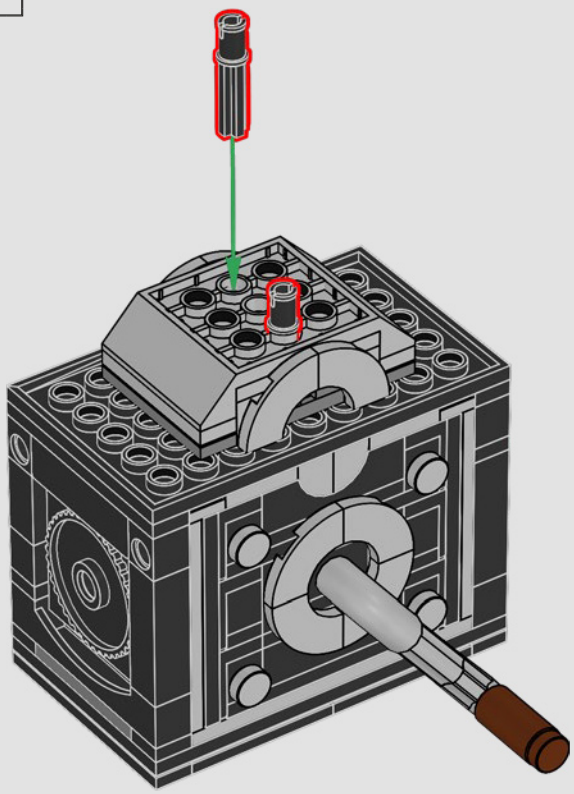

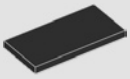

1x

138

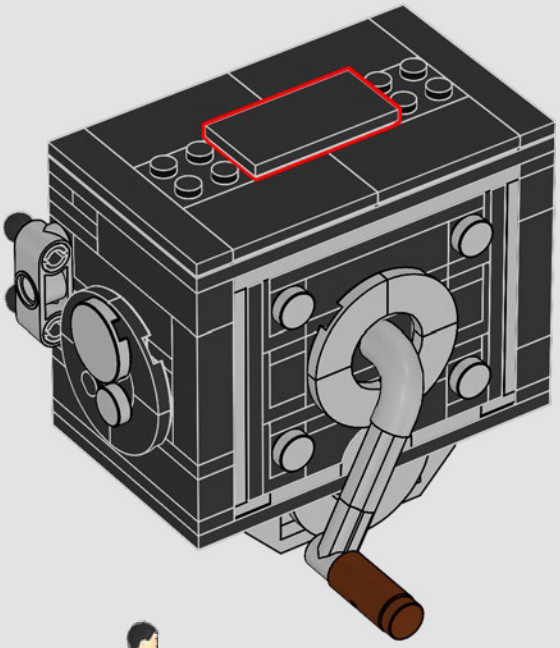

139

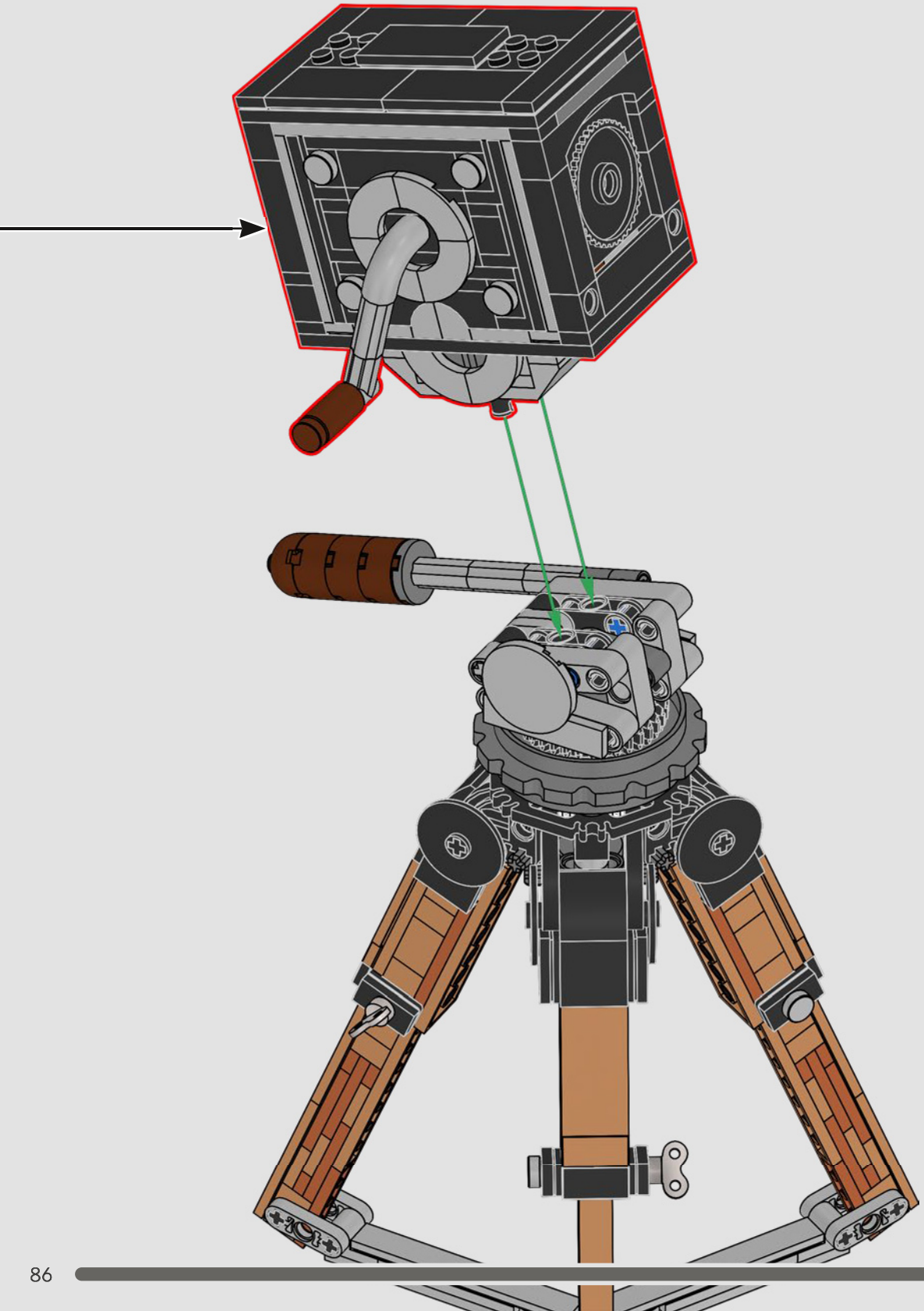

5

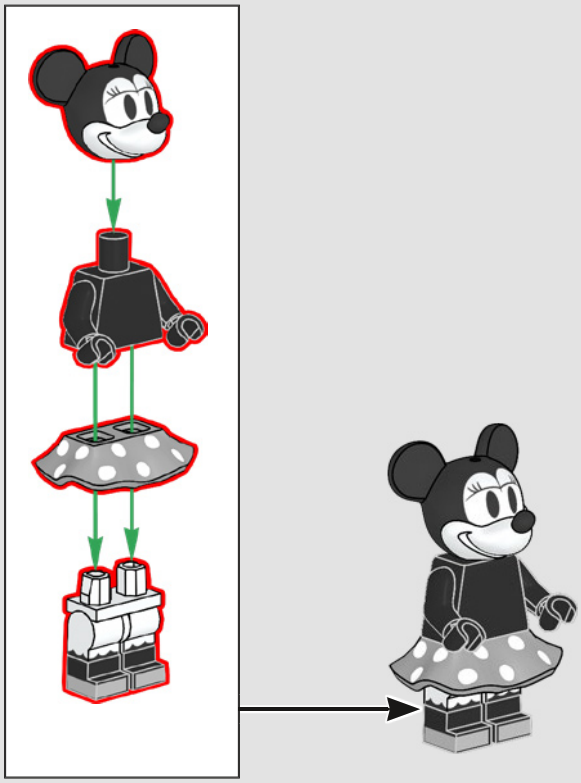

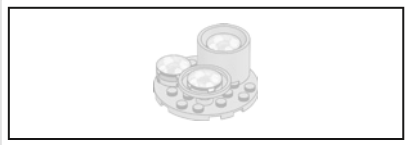

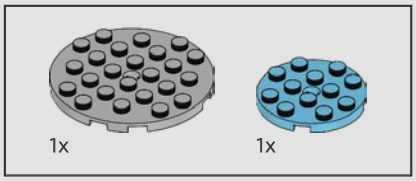

140

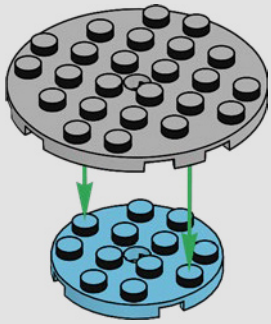

141

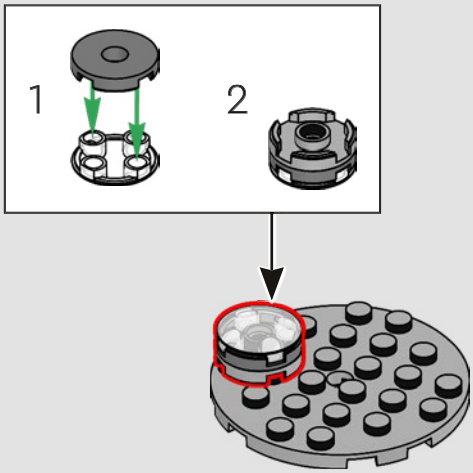

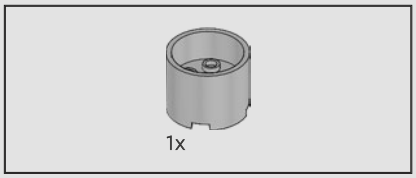

142

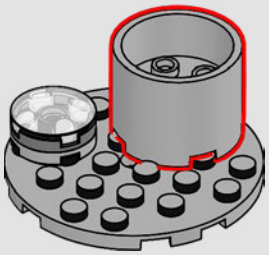

143

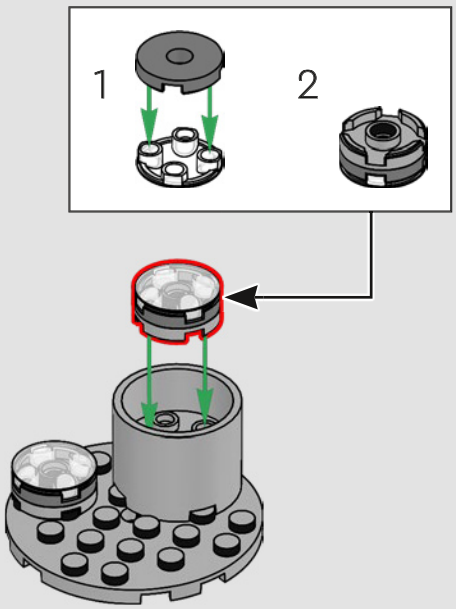

144

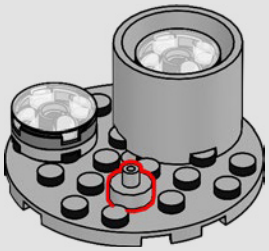

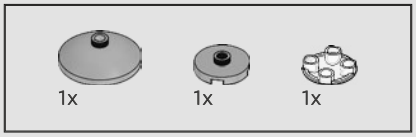

145

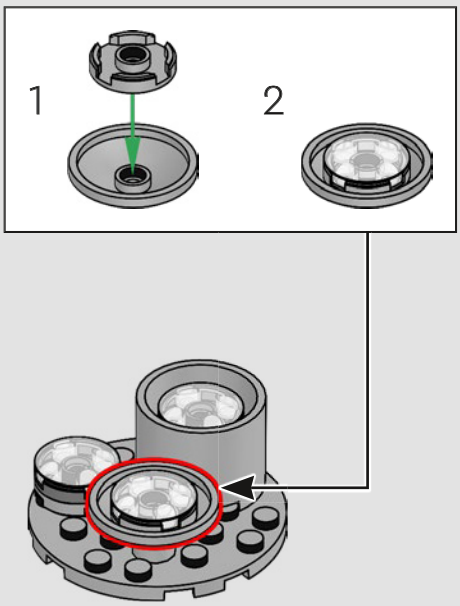

146

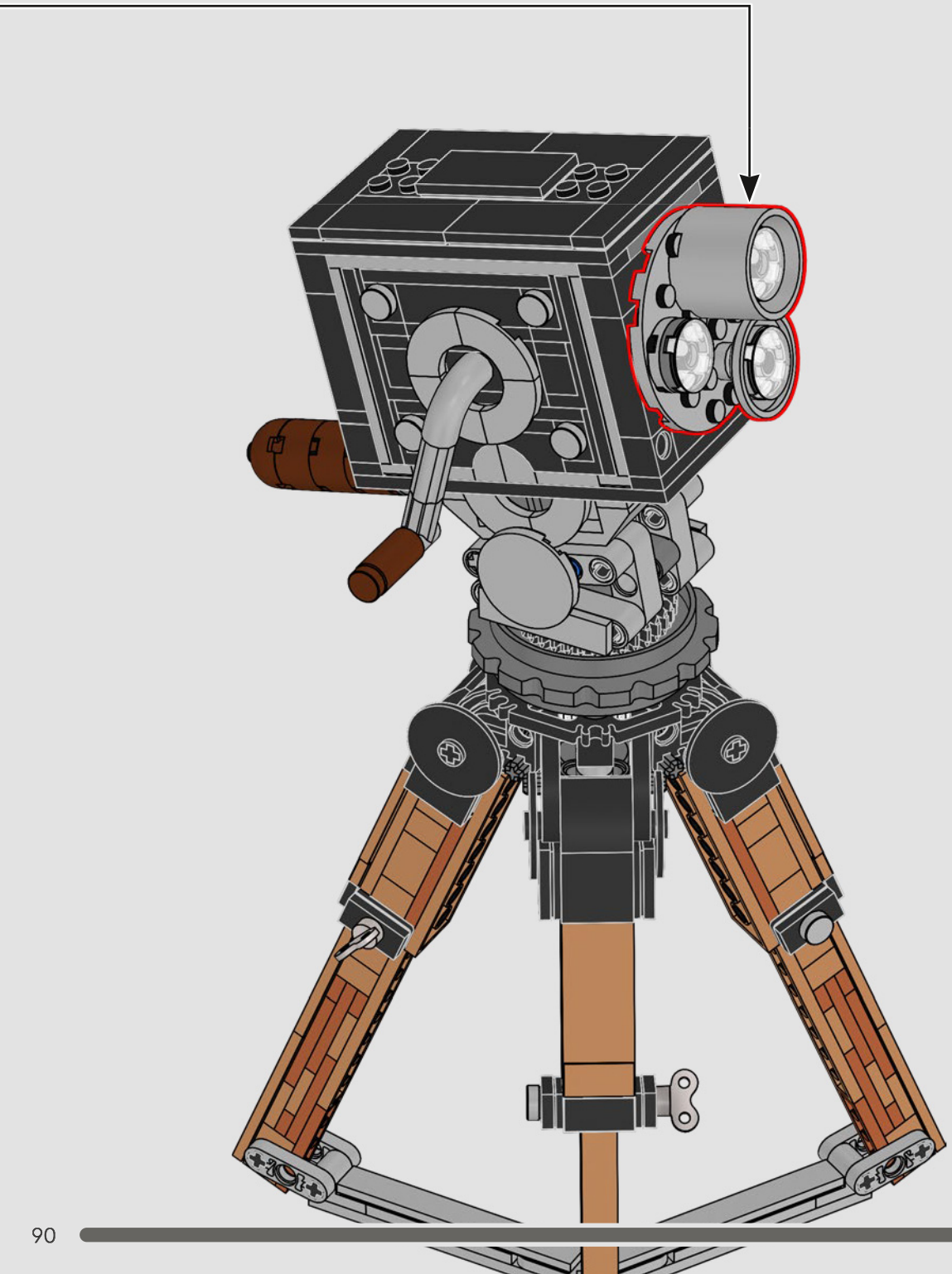

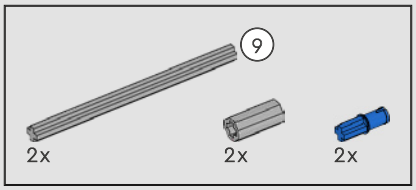

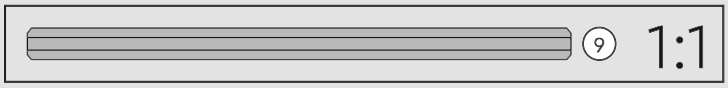

147

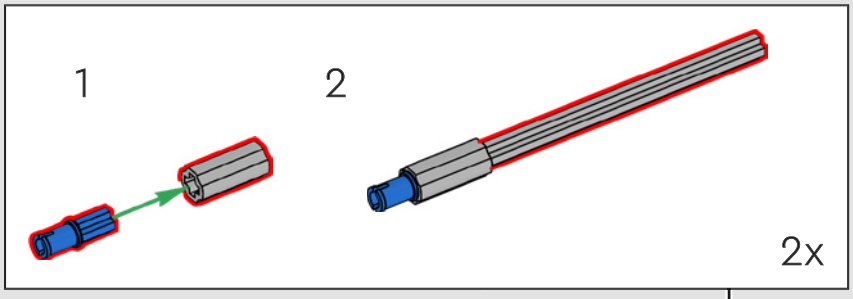

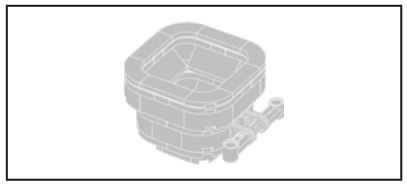

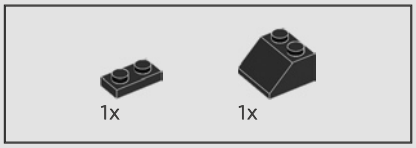

148

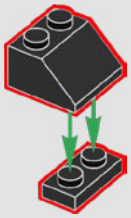

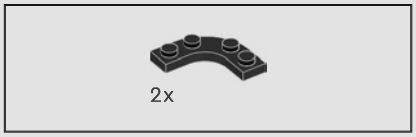

149

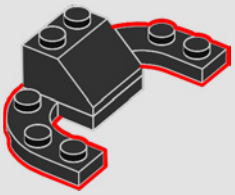

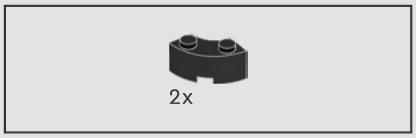

150

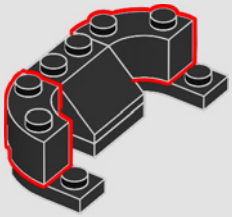

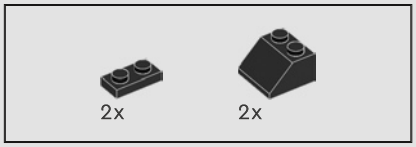

151

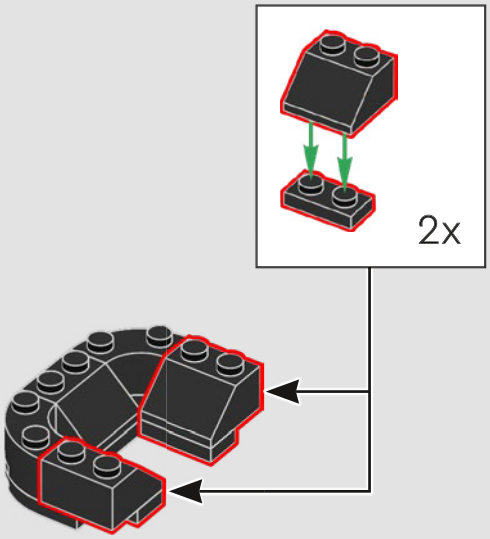

152

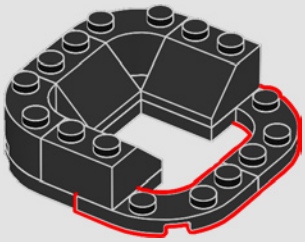

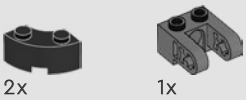

153

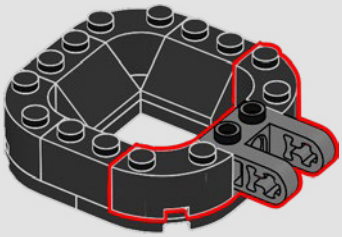

154

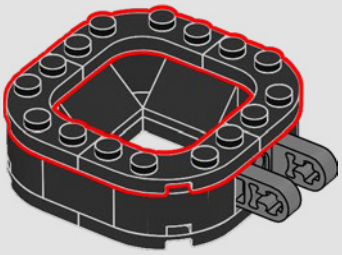

155

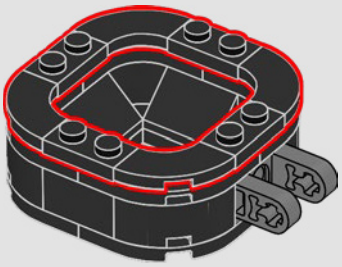

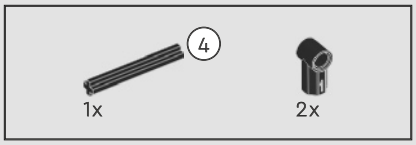

156

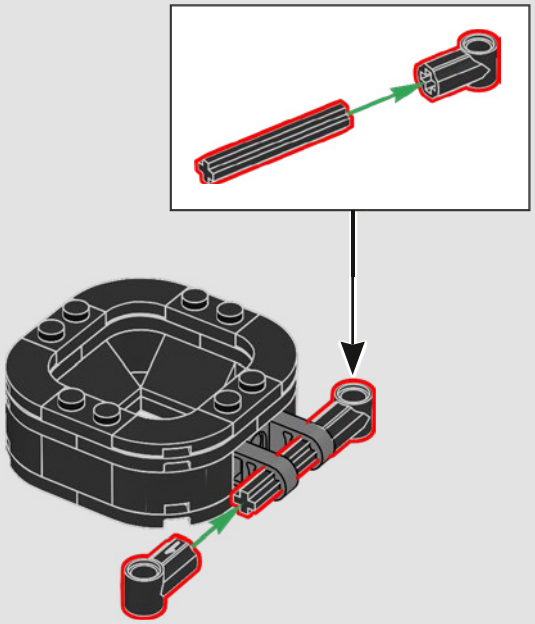

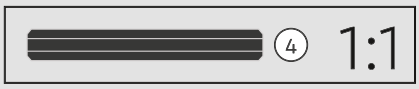

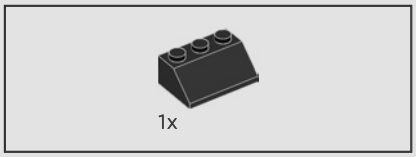

157

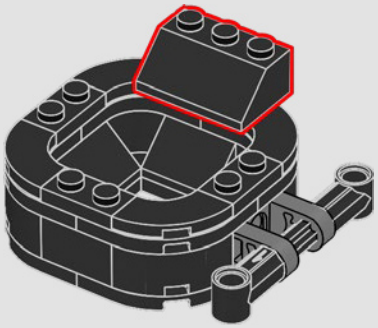

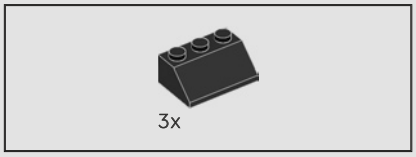

158

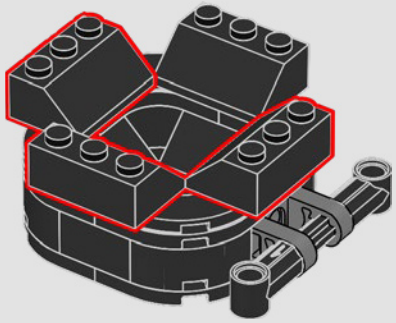

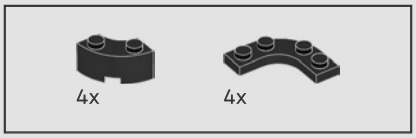

159

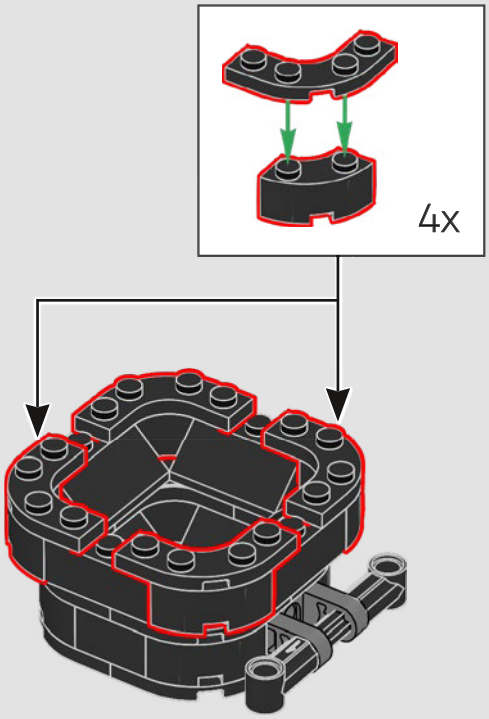

160

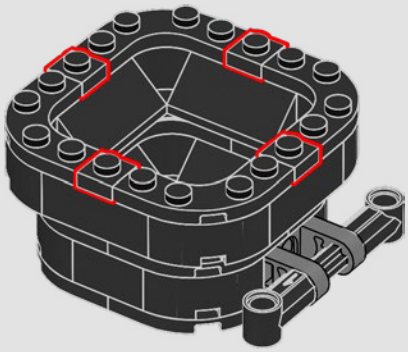

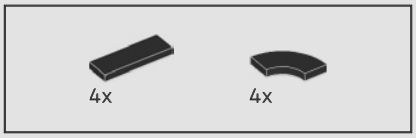

161

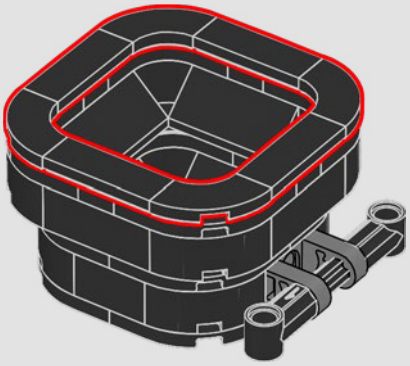

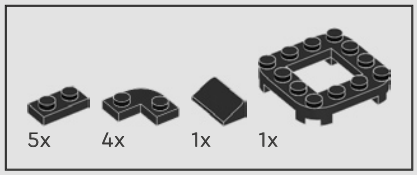

162

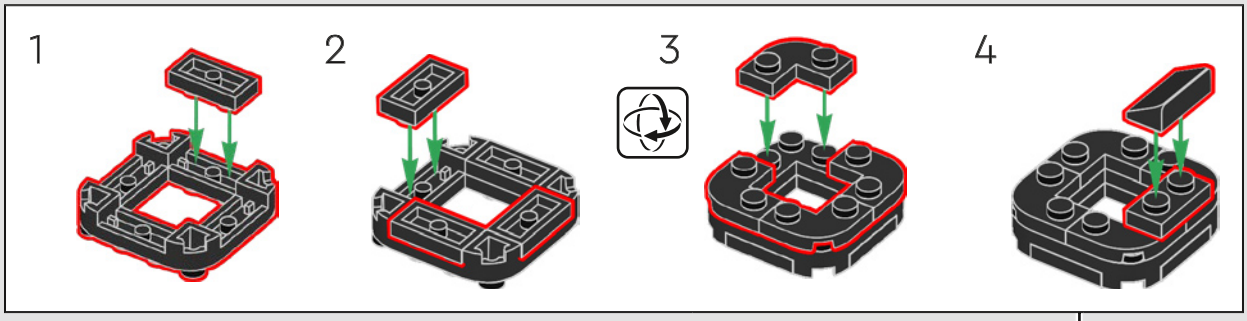

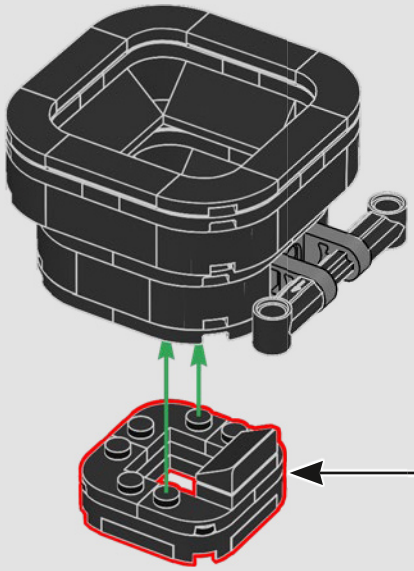

163

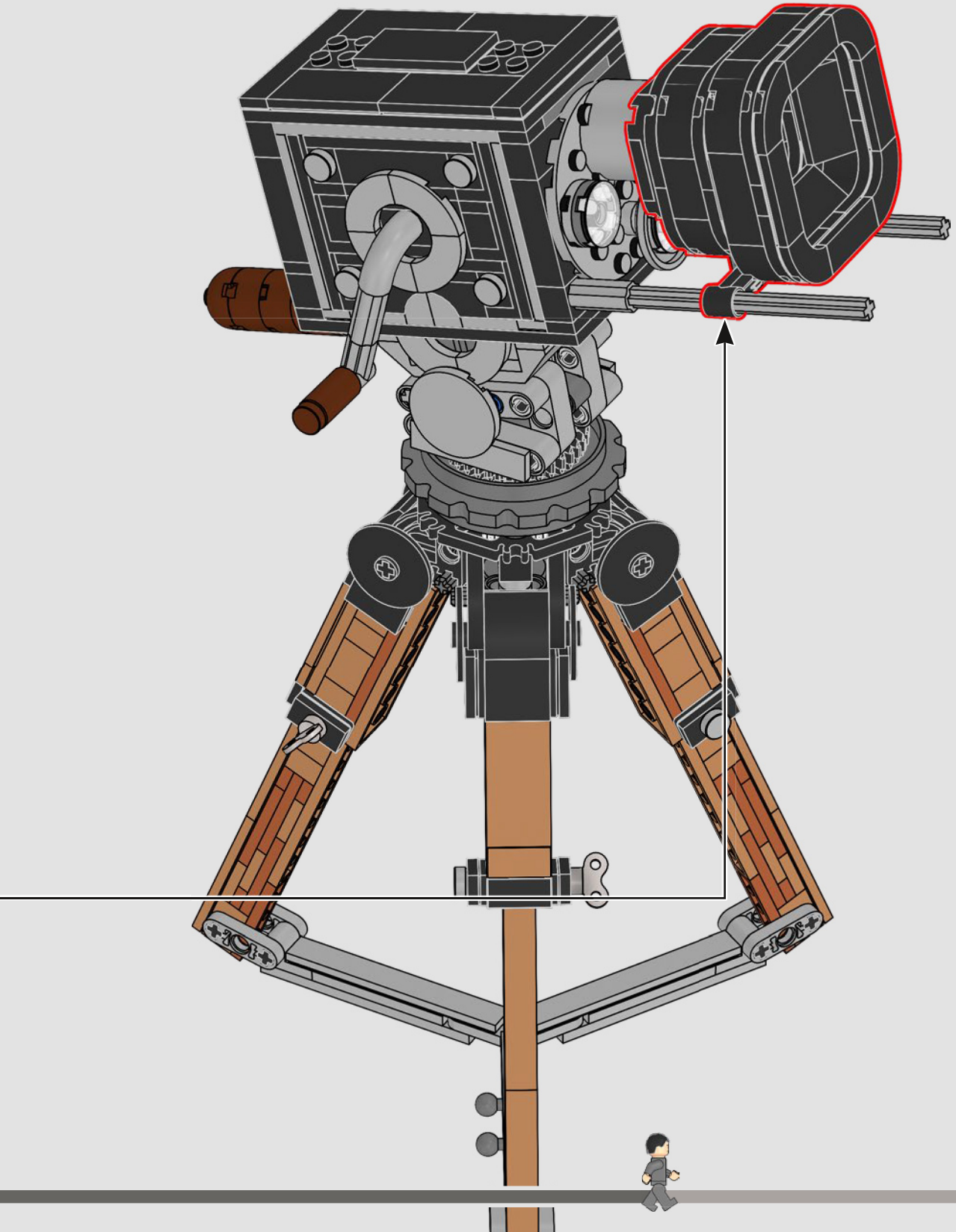

164

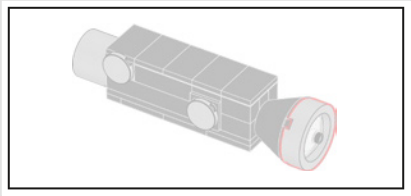

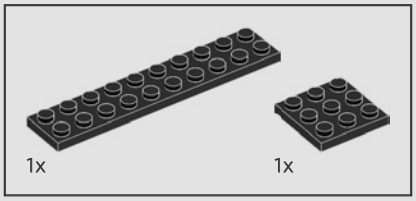

165

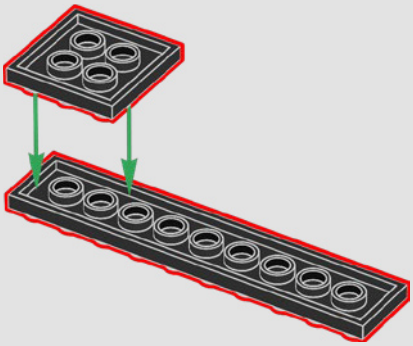

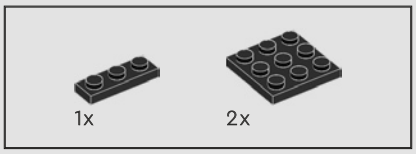

166

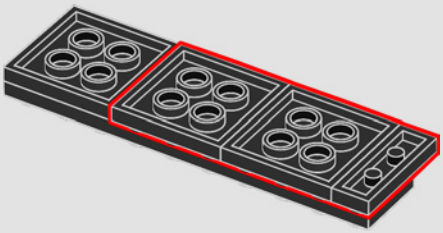

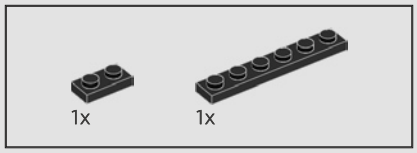

167

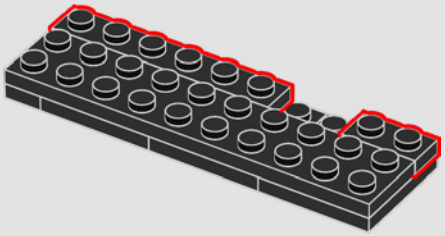

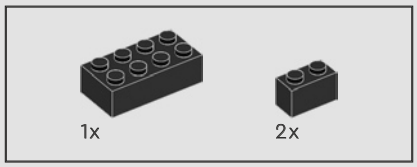

168

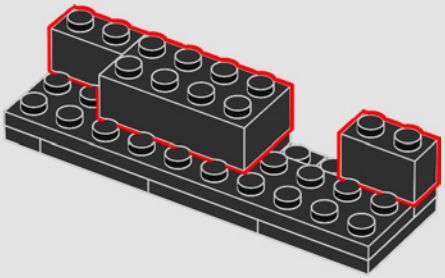

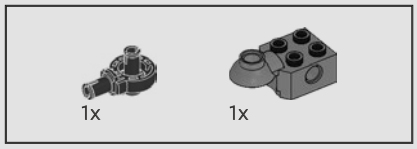

169

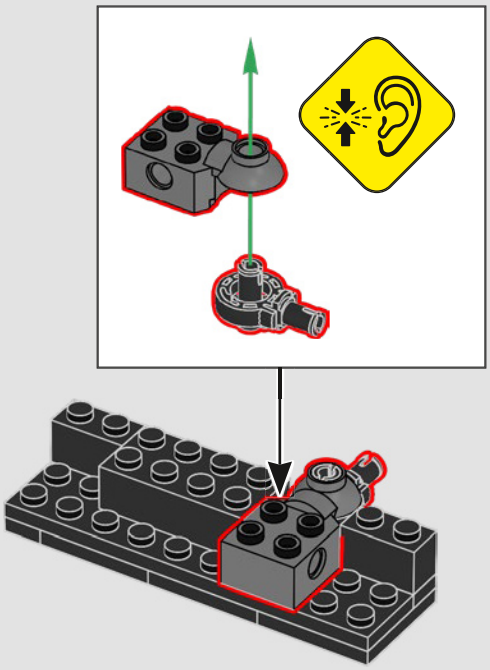

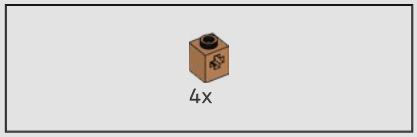

170

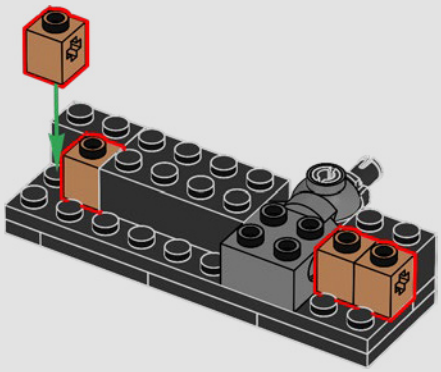

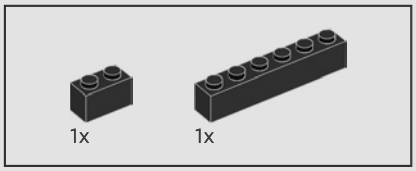

171

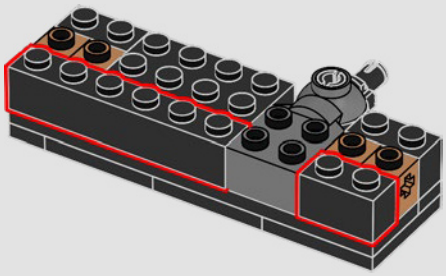

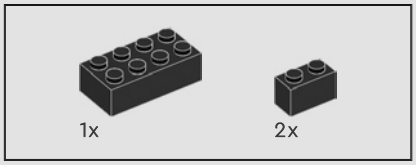

172

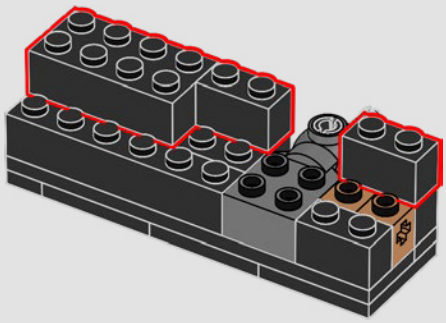

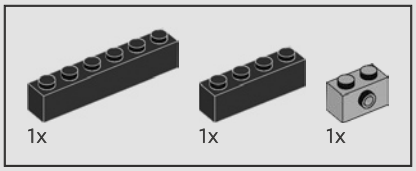

173

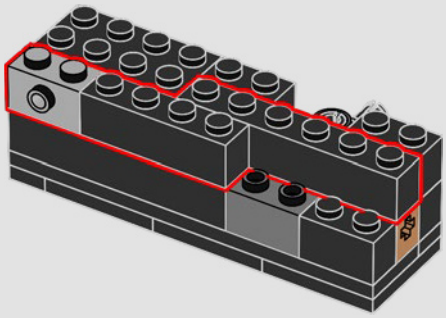

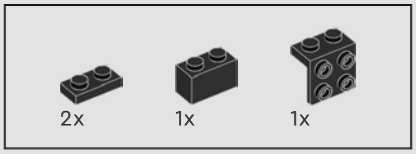

174

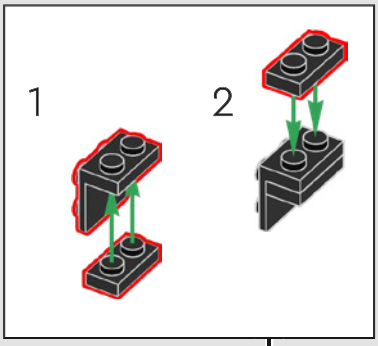

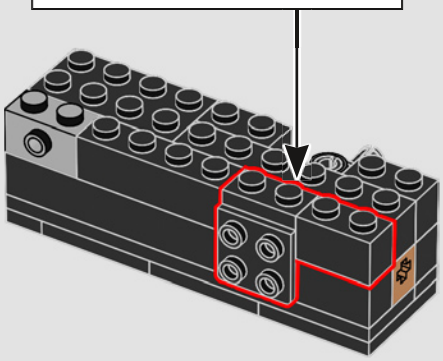

175

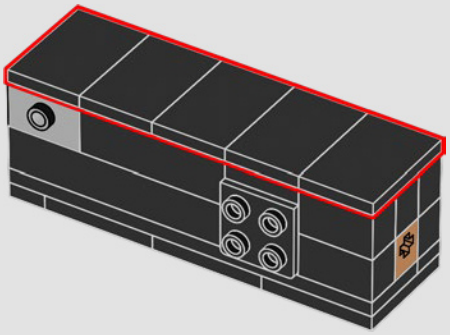

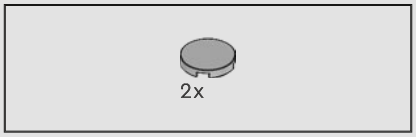

176

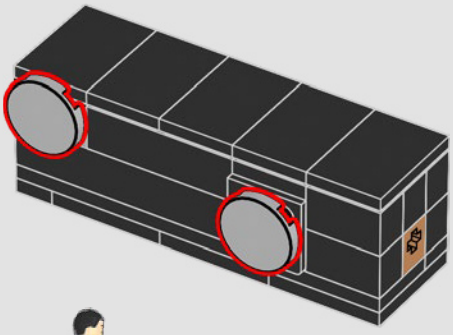

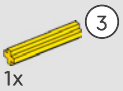

177

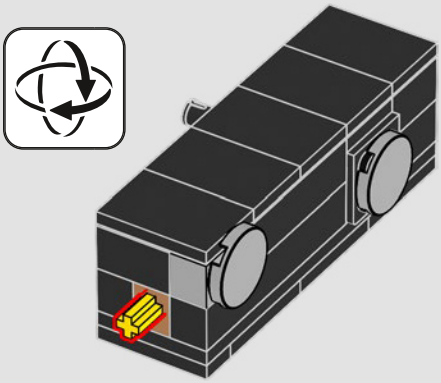

178

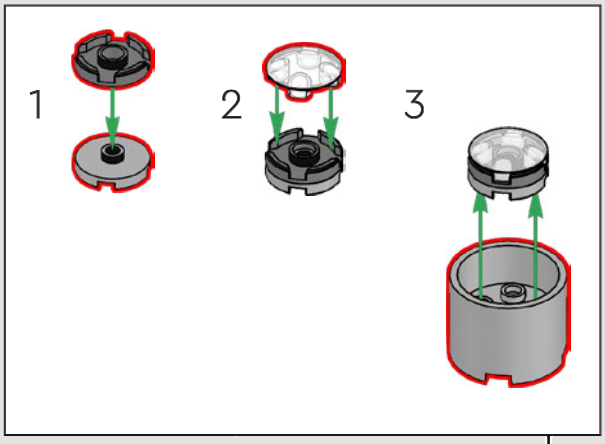

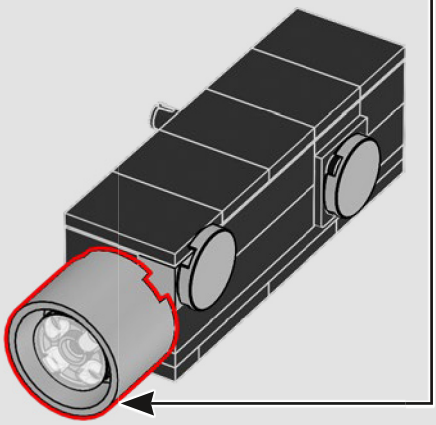

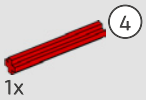

179

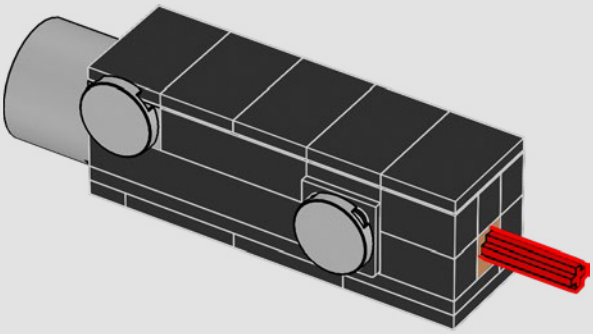

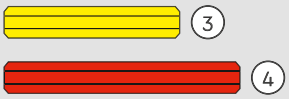

1:1

2x

180

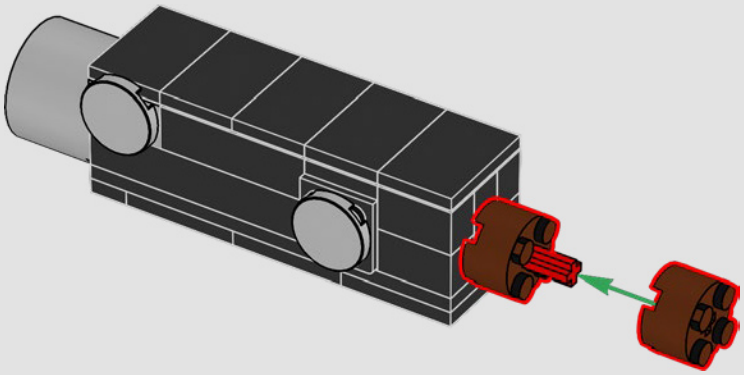

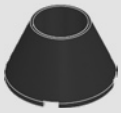

1x

181

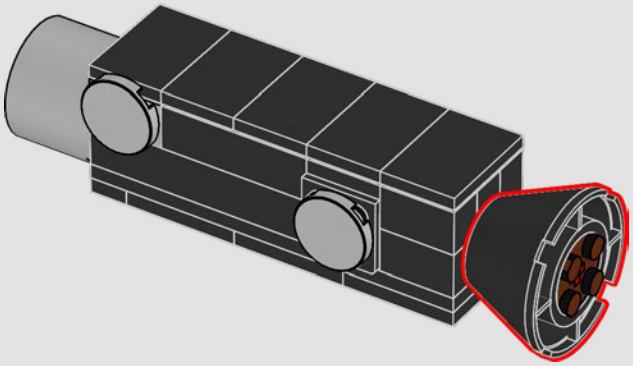

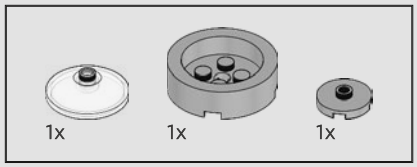

182

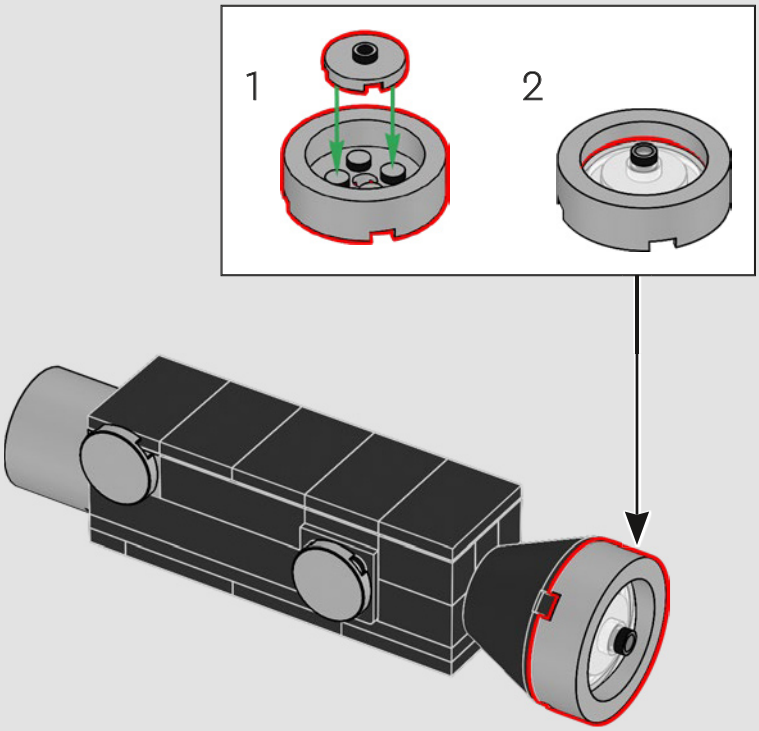

183

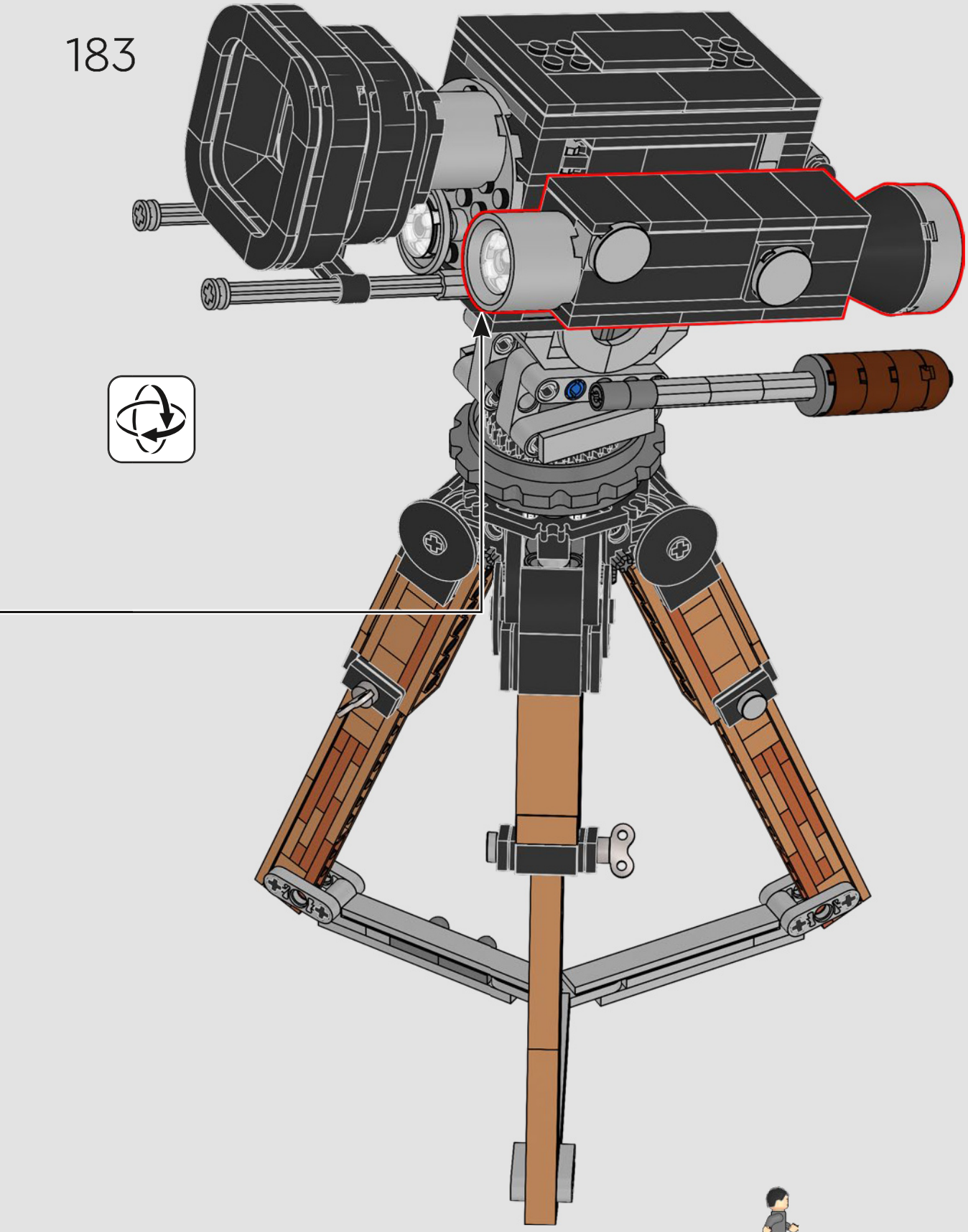

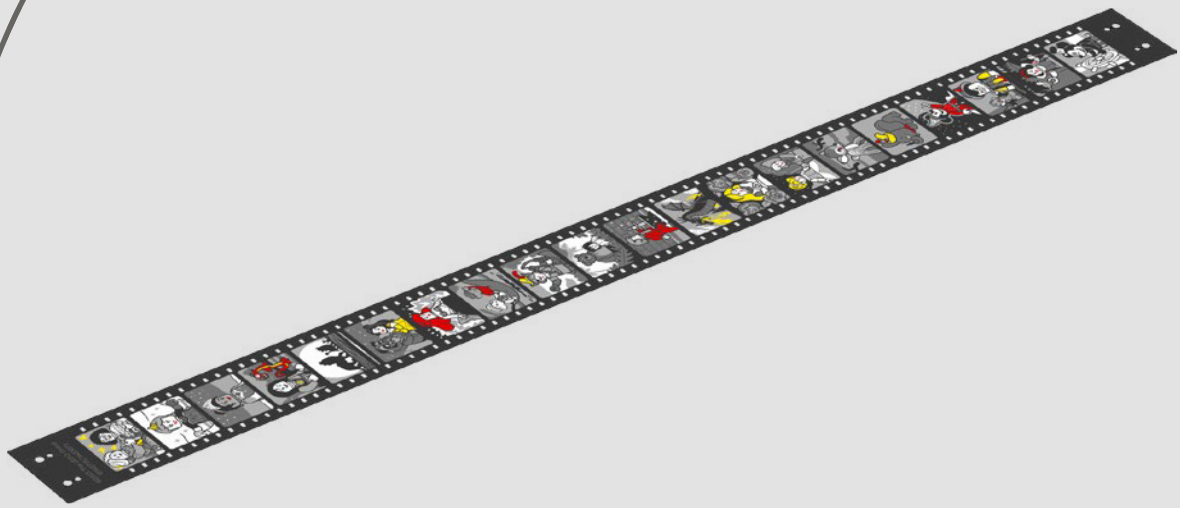

1x

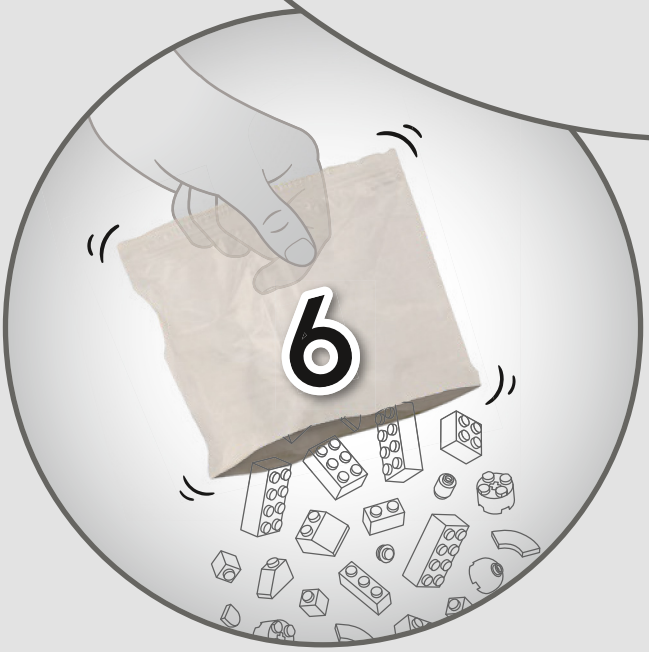

184

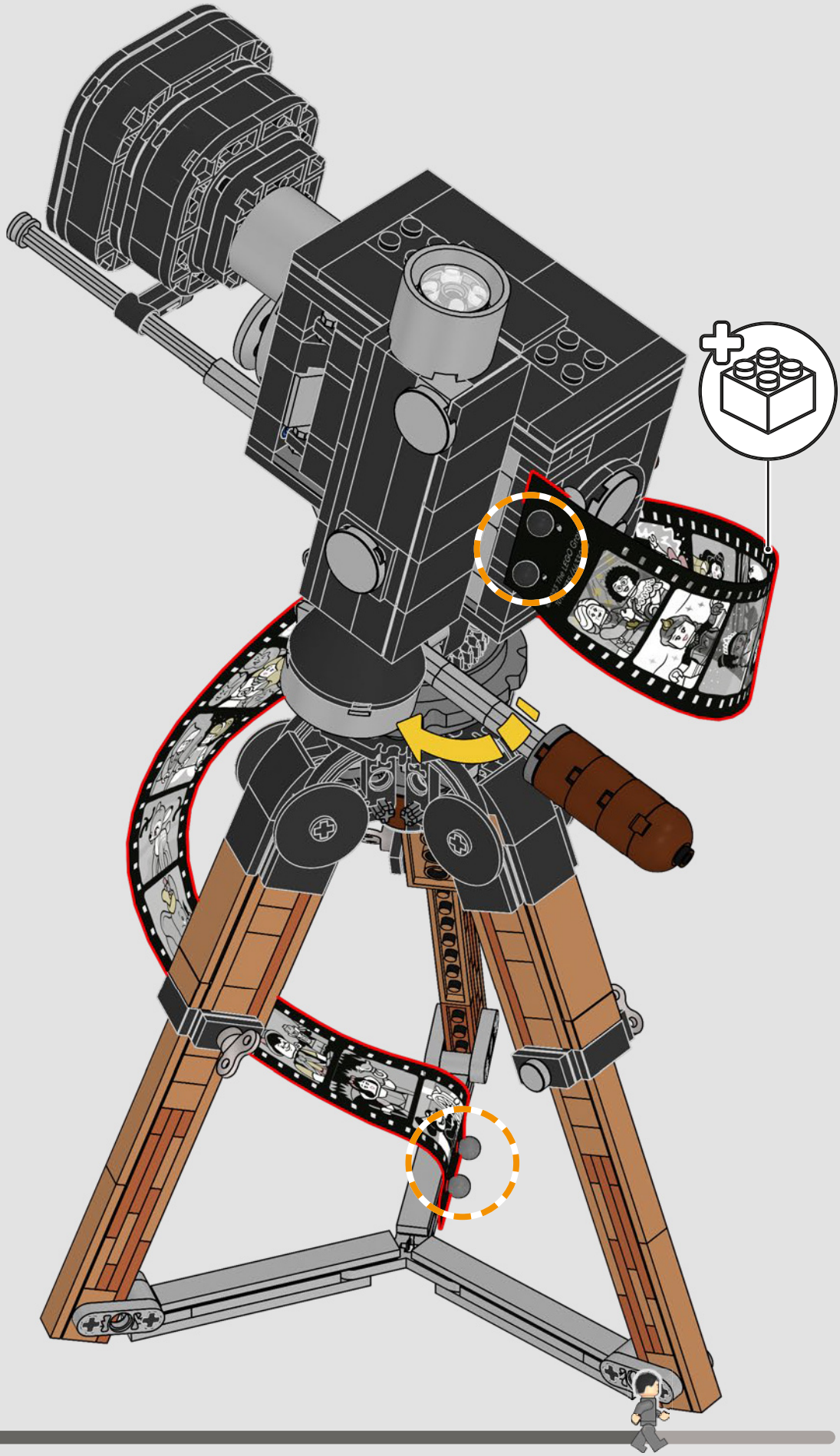

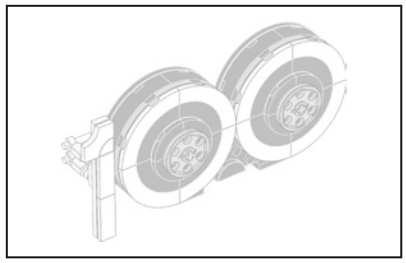

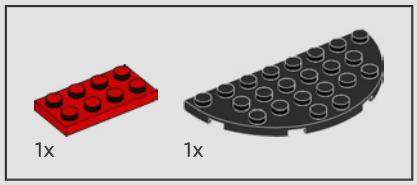

185

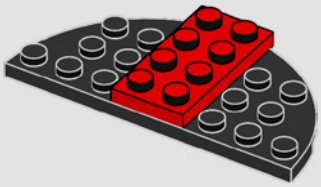

186

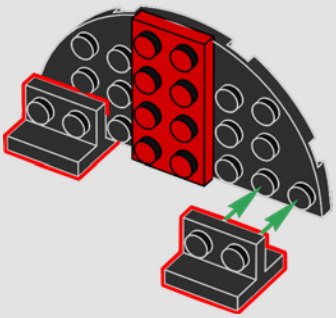

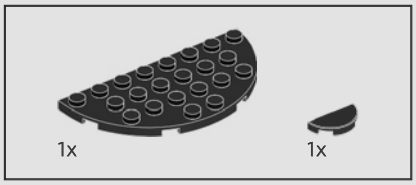

187

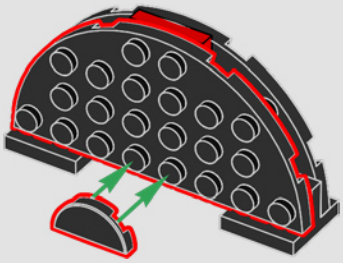

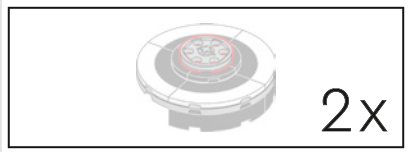

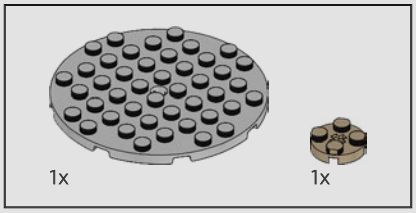

188

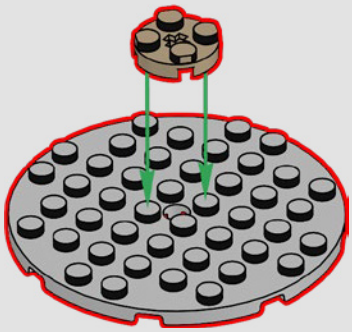

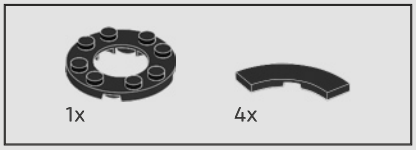

189

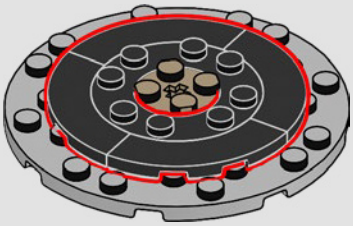

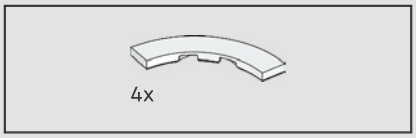

190

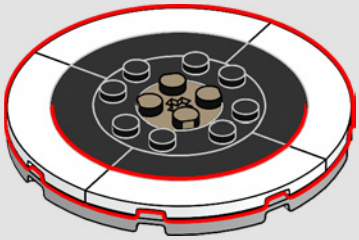

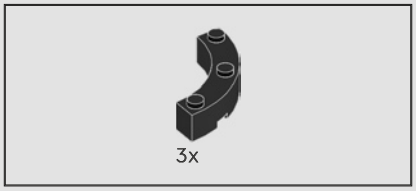

191

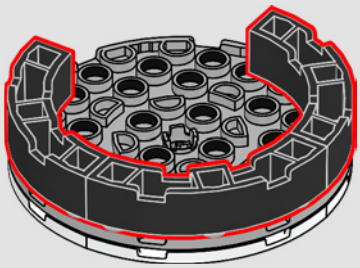

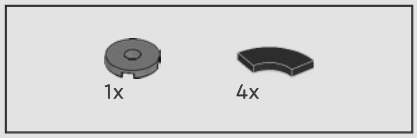

192

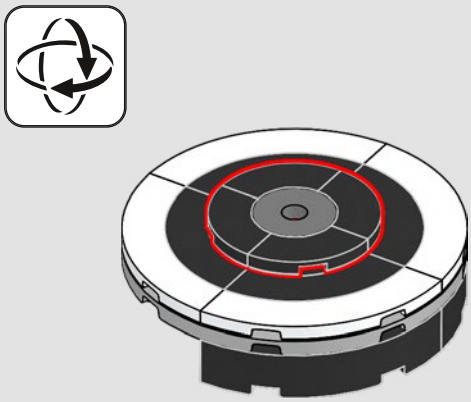

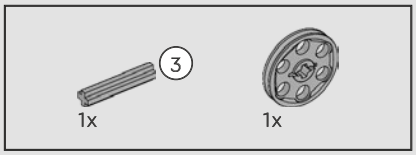

193

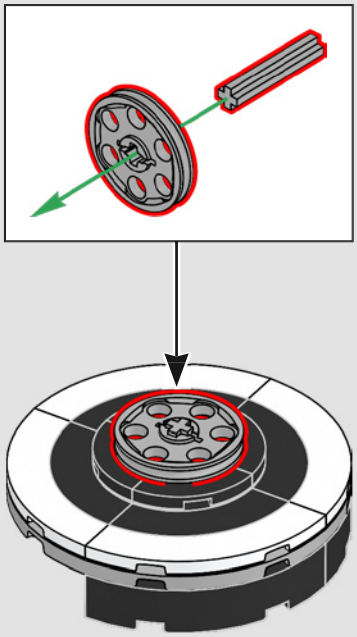

2x

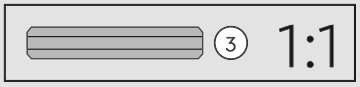

194

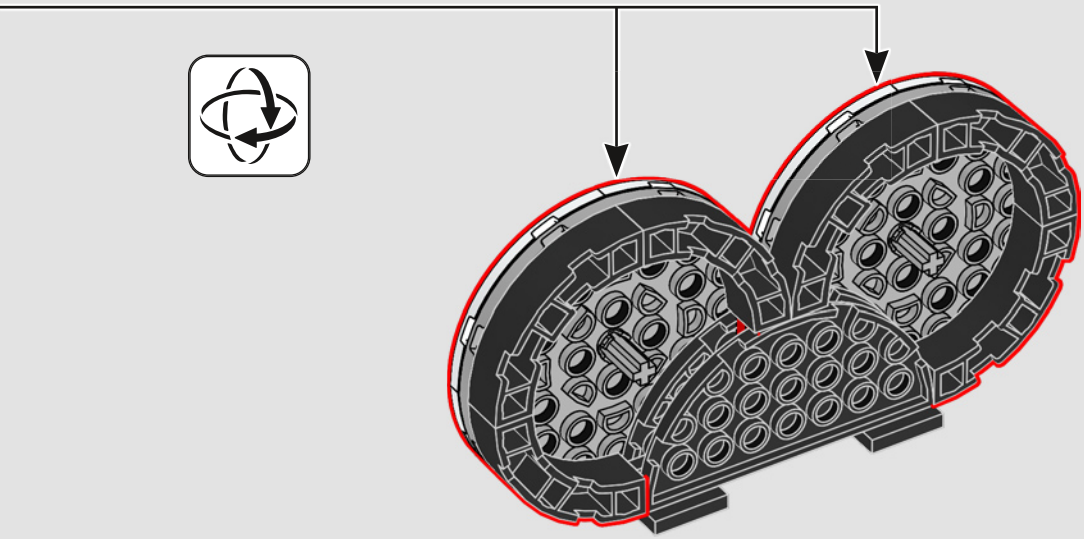

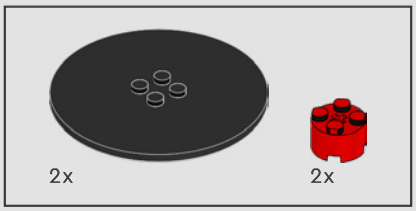

195

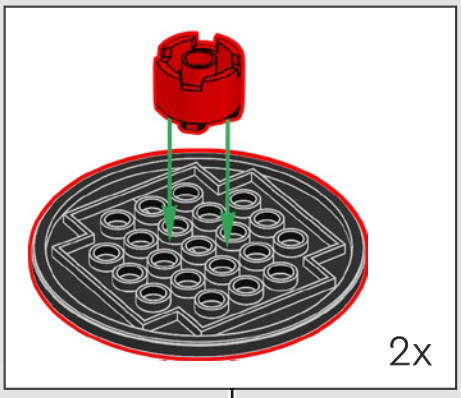

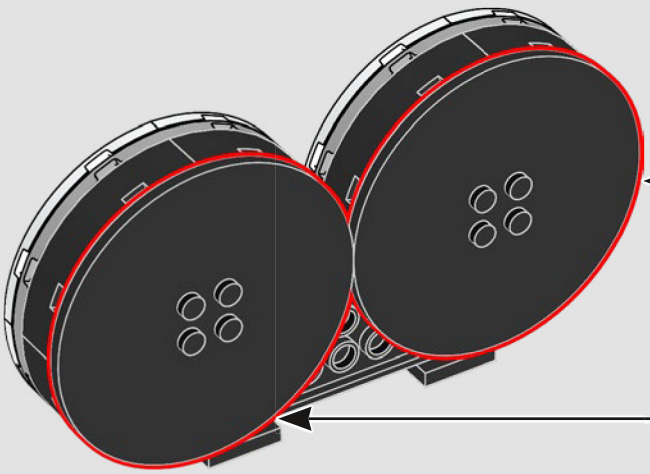

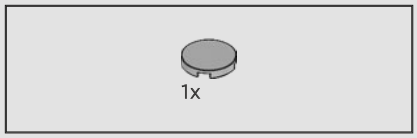

196

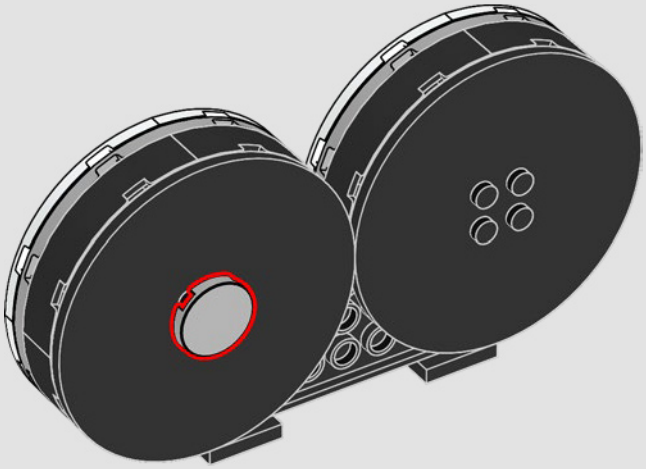

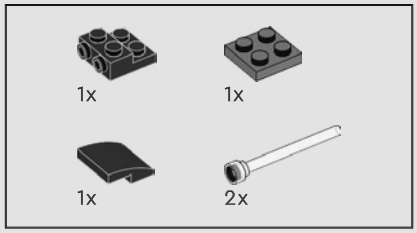

197

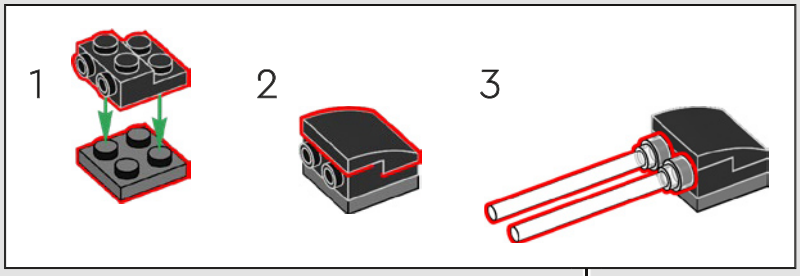

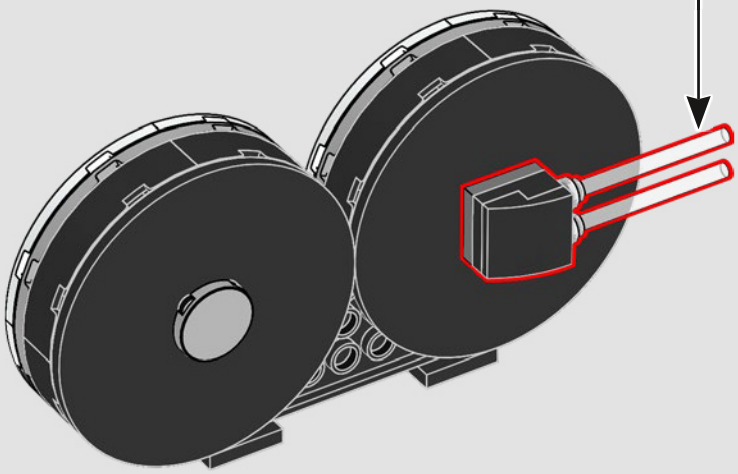

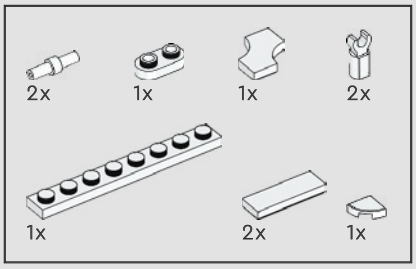

198

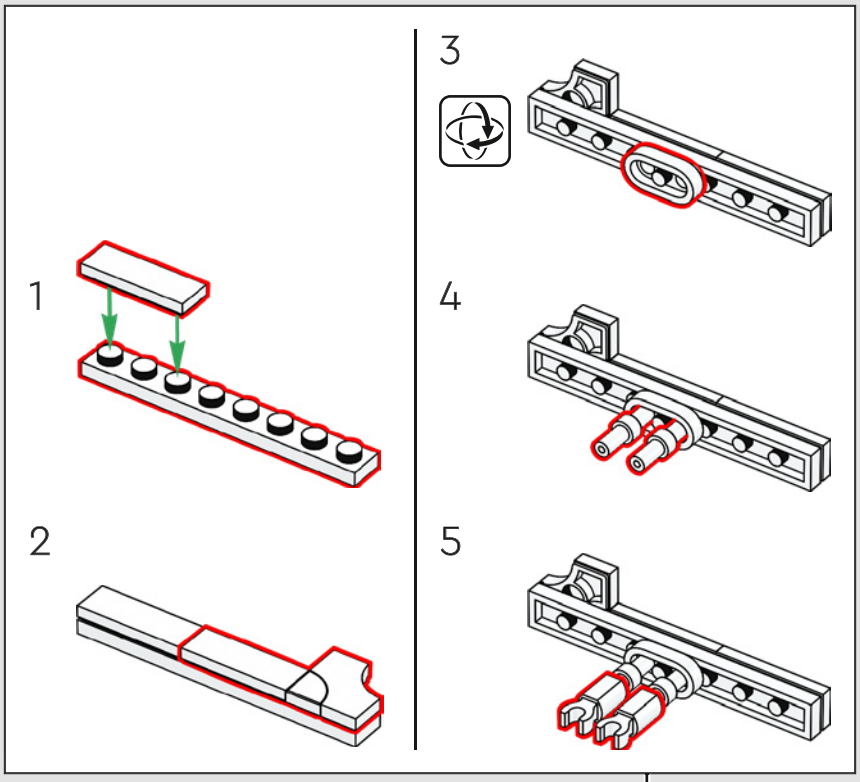

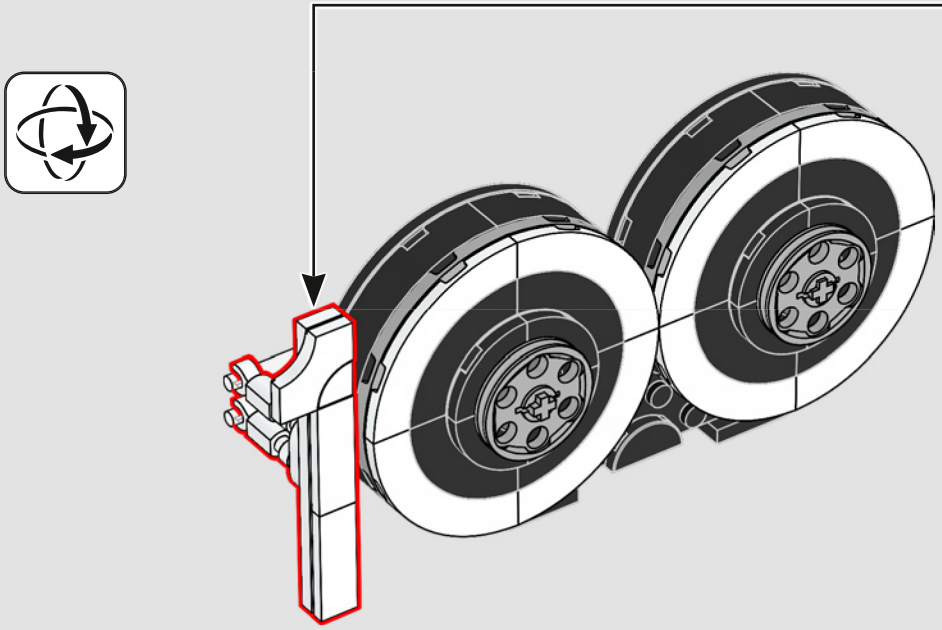

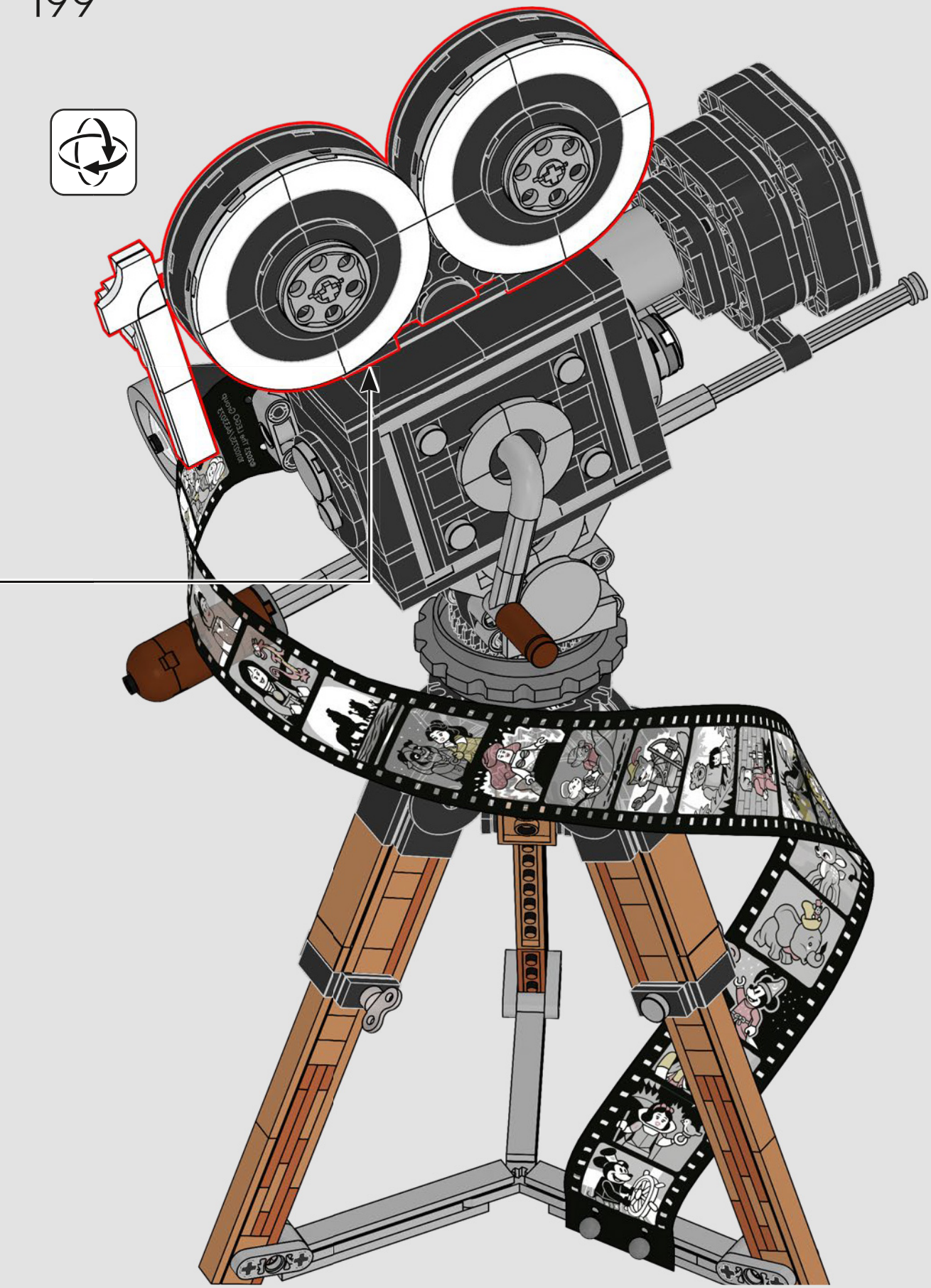

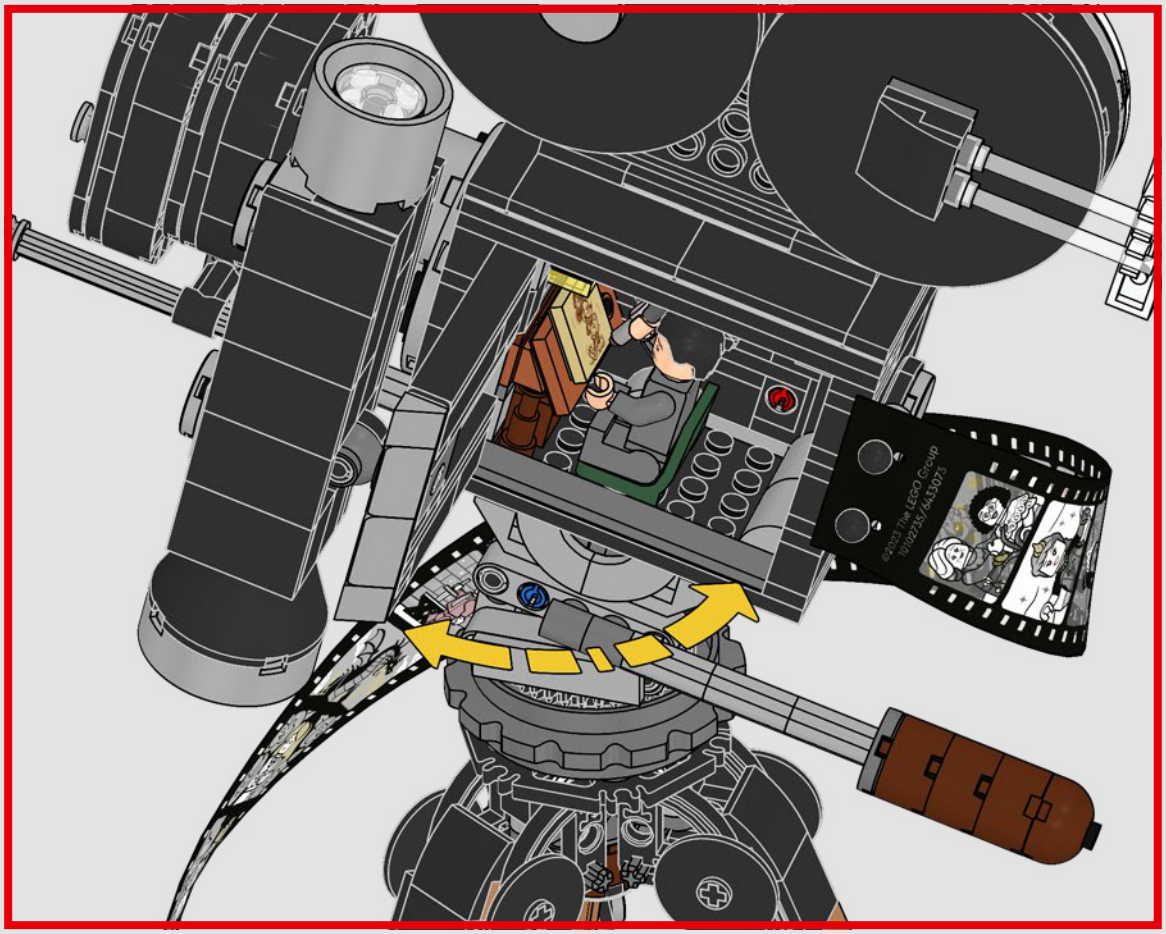
©2023 The LEGO Group
10302735/6453073

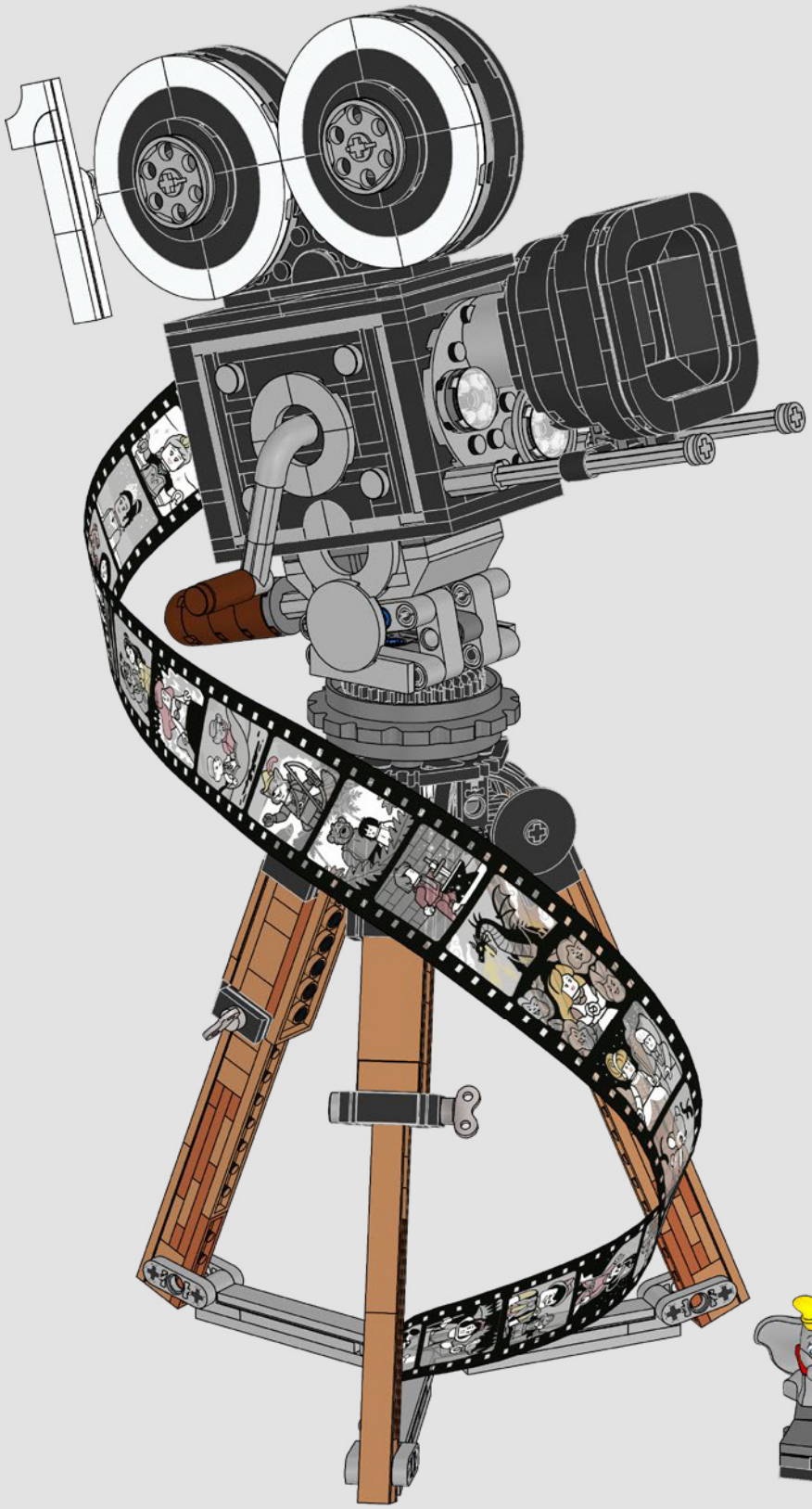
100

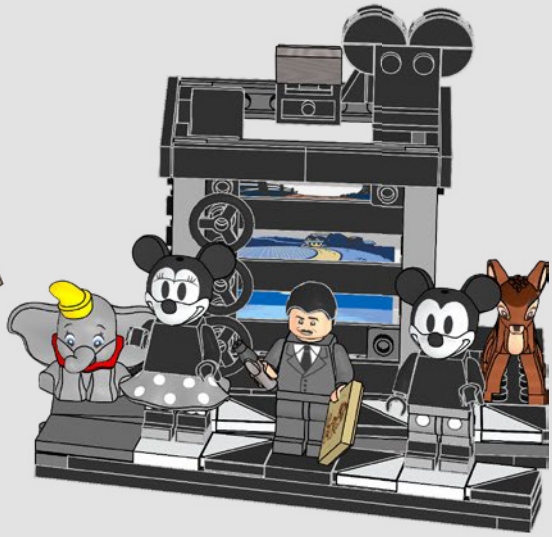

2x 6341465
6x 6360263
1x 6172366
1x 6449595
1x 6210272
2x 6357680
1x 6440869
6x 6217875
1x 6457511
1x 6459554
4x 6218822
2x 4558168
8x 6457244
1x 346001
4x 4161734
2x 6321305
1x 6443924
7x 6378120
4x 4142865
2x 614321
1x 6344178
4 7x 6129995
1x 302021
6 1x 6130002
6x 4206482
3 1x 6130007
1x 6056234
4x 6186675
2x 6284699
1x 4504382
2x 6172383
16x 302426
11x 654126
3x 6228987
2x 6065496
1x 6234695
9x 6335317
6x 6380236
1x 4654944
2x 6344752
3x 6420852
1x 4548180
4x 403226
10x 6279875
1x 4278359
6x 4109810
3x 6057397
2x 6265091
10x 6092585
20x 302326
6x 300426
2x 6275806
1x 370026
6x 6178922
3x 306926
6x 6252902
5x 6020193
12x 6117973
6x 6000650
1x 6310268
6x 6271346
3x 6250020
6x 6214807
6x 4218868
1x 6346535
1x 4225201
1x 4213374
6x 6336619
3x 6192346
1x 6211476
20x 6191630
4x 6053077
2x 242026
9x 306826
4x 6430580
3x 303926
2x 6263485
1x 4584274
8x 4567436
2x 6089119
1x 6469445
2x 6276951
1x 362226
1x 362326
4x 4558170
7x 6162892
4x 303826
4 4x 370526
6x 243126
4x 371026
1x 6115117
5x 301026
1x 6092570
1x 365926
3x 6337273
2x 6167800
1x 4550922
3x 6174917
8x 6434275
2x 6245788
1x 4255563
12x 6325190
2x 302026
3x 300126
5x 4560182
1x 6457556
7x 663626
9x 366626
3x 300926
1x 4620763
1x 4517986
3x 6318582
1x 6345465
1x 346026
2x 6133200
2x 303426
2x 4205860
1x 447726
1x 383226
2x 4514845
2x 303326
2x 6001494
1x 6240515
4x 6301284
2x 4666322
2x 6104342
9x 6186012
12x 6074892
1x 6288614
3x 6219673

4x 6163901
1x 6244730
1x 6456161
1x 6440877
2x 6166111
1x 6456162
1x 6102828
2x 6240211
3x 6225230
2x 6267136
8x 6284071
1x 6296859
2x 4521921
2x 4211415
4x 4558953
1x 4211399
8x 6348143
3x 4568637
4x 6052200
5x 6183782
1x 4211807
1x 6151349
1x 6440871
6x 4512360
1x 6383177
4x 6227184
2x 4211398
9x 4211525
2x 6271165
1x 6258831
6x 6360043
2x 6321743
8x 6163990
3
6x 4211815
2x 4211655
1x 6408168
1x 6070564
1x 6306721
2x 6326483
1x 6440879
4x 4211445
2x 4211356
1x 6303438
1x 6440880
5
1x 4211639
2x 6307999
5
4x 4211651
1x 6015349
2x 6372029
2x 4211549
1x 4549997
7x 4211481
4x 4211425
9
3x 4535768
2x 6353794
2x 6312450
1x 4538760
1x 6433073
1x 6440872
1x 6440881
1x 6284586
1x 6429060
6x 4211166
4x 4211149
1x 6186045
1x 6173132
2x 6310449
1x 6167644
3x 4211190
3
1x 6135494
5
3x 6159763
2x 6325980
1x 4222693
7x 6055313
1x 6398662
2x 6039479
1x 6214341
5x 6308045
1x 6273715
2x 6236949
1x 4211094
1x 6015356
1x 6317653
1x 6454229
1x 6324639
2x 6187008
2x 6282144
9x 6221607
3,2
1x 6031821
1x 4211042
6x 6005331
2x 6257592
1x 6279898
1x 6416526
2x 4227398
1x 4211065
3x 4211056
1x 6254781
1x 4211008
1x 4210794
1x 4210802
2x 6454938
3x 6363150
1x 6446980
4x 6284595
1x 6385608
25x 6457557
2x 6399909
6x 6192920
9x 6218360
3x 6021997
3x 6058085
3x 6218359
6x 6102995
3x 6347603
6x 6226644
LEGO.com/service

YOU COULD WIN

YOU COULD **WIN**

Your feedback will help shape the future development of this product series.

Visit:

DU KÖNNTEST **GEWINNEN**

Dein Feedback trägt zur Weiterentwicklung dieser Produktreihe bei.

Geh auf:

VOUS POURRIEZ **GAGNER**

Vos commentaires nous aideront à concevoir les futurs produits de cette gamme.

Visitez :

POTRESTI VINCERE TU

La tua opinione ci aiuterà a migliorare la creazione futura di questa linea di prodotti.

Visita:

PUEDES GANAR

Tu opinión contribuirá al futuro de esta serie de productos.

Visita:

轻松获奖

您的反馈将有助于我们在今后改进本产品系列。

请访问：

LEGO.com/productfeedback

You also have the chance to win a LEGO® set.

Terms and conditions apply.*

Außerdem hast du die Chance, ein LEGO® Set zu gewinnen.

Es gelten die Teilnahme-bedingungen.*

Vous pourriez également gagner un ensemble LEGO®.

Des conditions s'appliquent.*

Hai anche la possibilità di vincere un set LEGO®.

Termini e condizioni sono applicabili.*

También tienes la oportunidad de ganar un set LEGO®.

Aplican términos y condiciones.*

您还有机会赢取乐高®套装。

条款和条件适用。*

**LEGO.com/productfeedback-terms*

LEGO and the LEGO logo are trademarks of the LEGO Group. ©2023 The LEGO Group. 6493795
©Disney