8848

120215

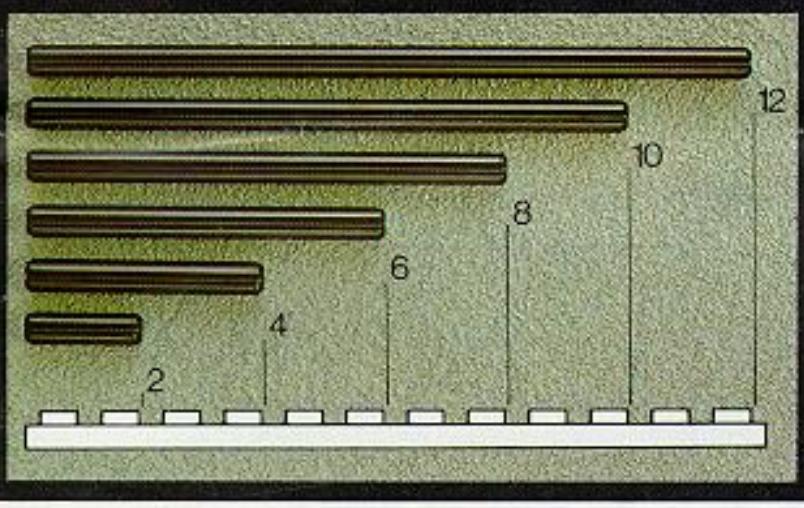

Los números que van al lado de los ejes en las instrucciones de montaje significan el largo del eje que debe utilizarse.

In der Bauanleitung steht vor den Achsen eine Zahl, die die benötigte Länge der Achsen anzeigt.

Numbers in the building instructions near axles show the length of axle to be used.

Dans les conseils de construction, il y a un chiffre à coté de chaque axe. Ce chiffre indique la longueur des axes à utiliser.

Ut for akslerne i byggeanvisningen er anført et tal, som viser hvilken aksellengde som skal brukes.

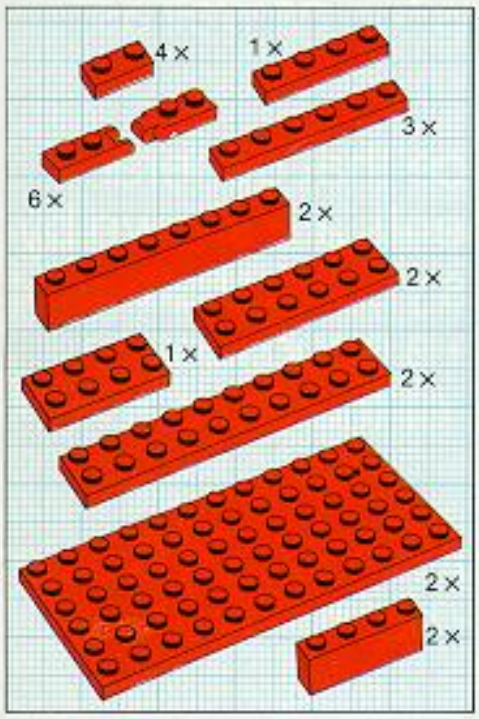

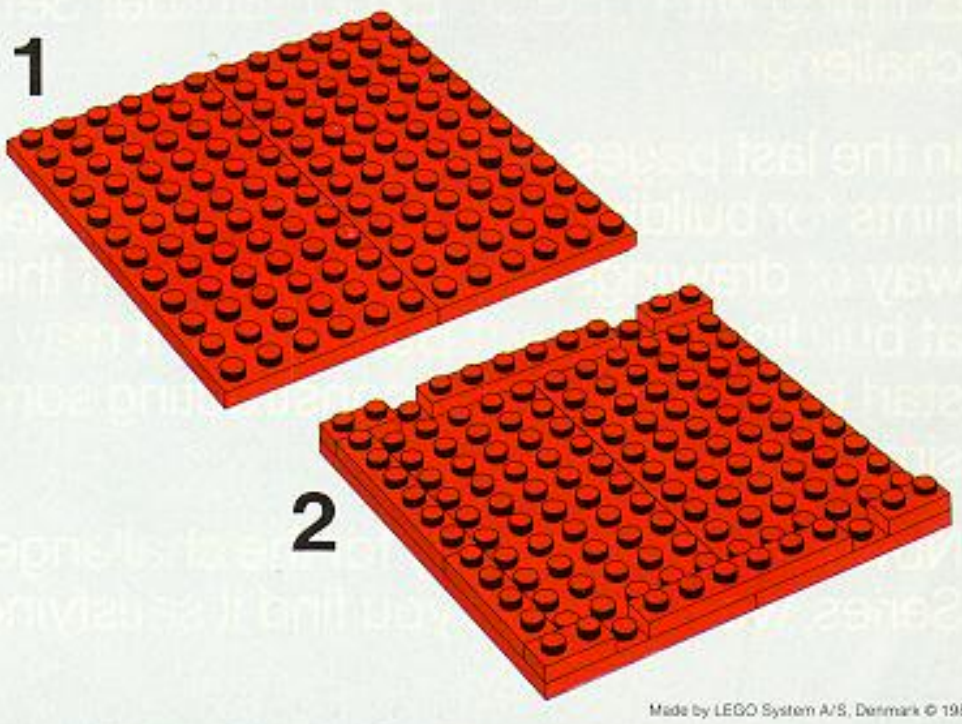

Made by LEGO System A/S, Denmark © 1981

This booklet contains detailed building instructions for the models featured on this package.

It is important that you follow the step by step building instructions very closely. The following building hints will help you to realize the fun and satisfaction of this Expert Builder Set:

- The instructions for building your Expert Model are divided into individual construction phases. Each phase is numbered starting with number one. If you are having difficulty in building your model, it sometimes helps to look ahead at the next construction steps.
- The quantities and types of building pieces to be added are shown at each phase of construction. Select and count each of these pictures before you start building the next phase.
- Once your model is completed, all moveable parts such as gears and axles, should be adjusted until they run smoothly and freely.
- Take your time. The fun of Expert Building will then last even longer!

Building with LEGO® Expert Builder Sets is fun as well as challenging.

In the last pages of this book, you will notice that general hints for building with Expert Builder elements are shown by way of drawings and photographs. If this is your first attempt at building an Expert Builder Set, it may be a good idea to start by looking at and constructing some of the smaller, simpler items shown.

Now that you are ready for the challenge of the Expert Builder Series, we hope that you find it satisfying - but fun too!

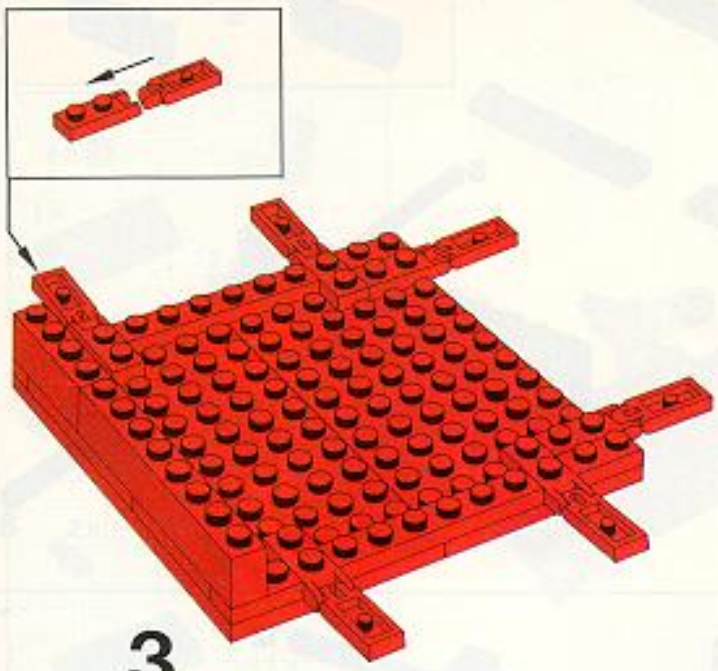

3

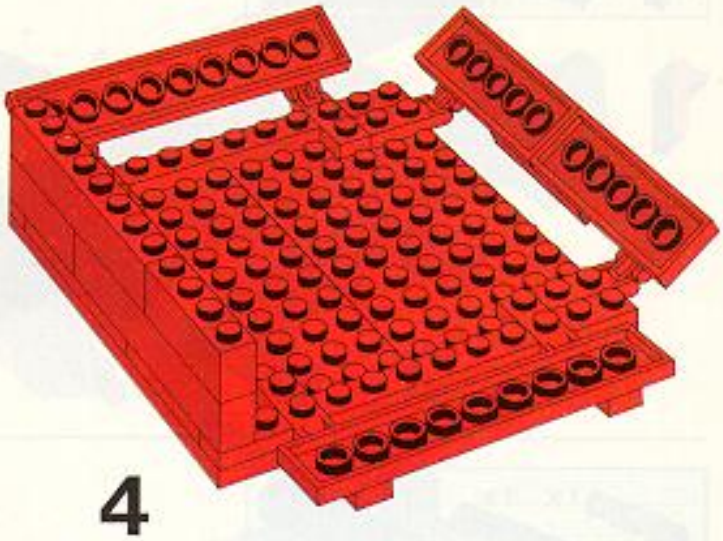

4

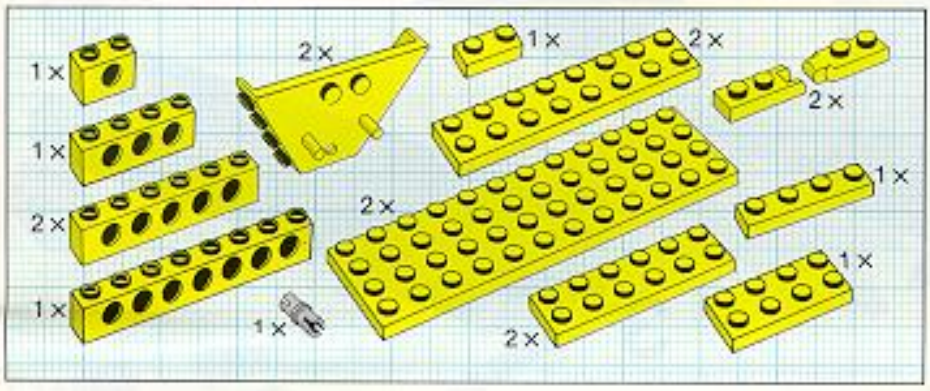

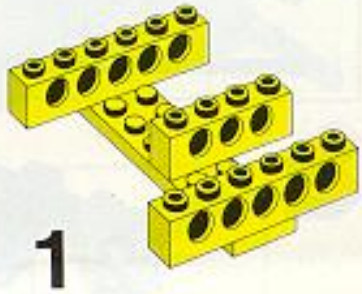

1

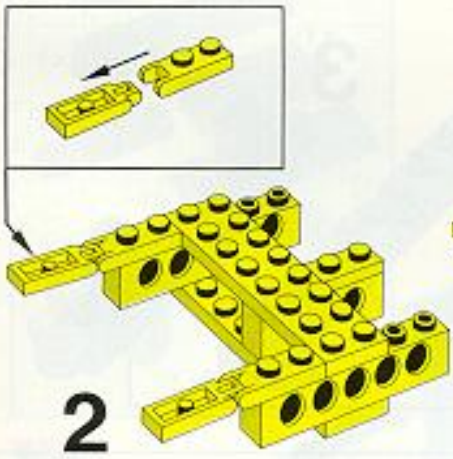

2

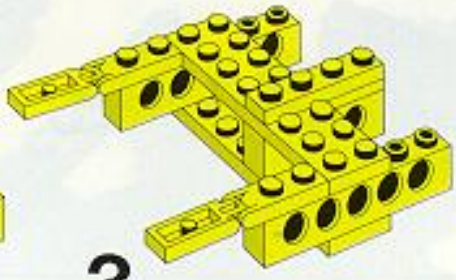

3

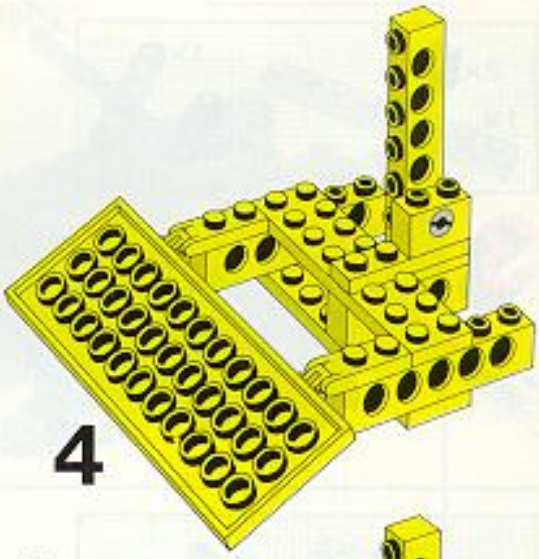

4

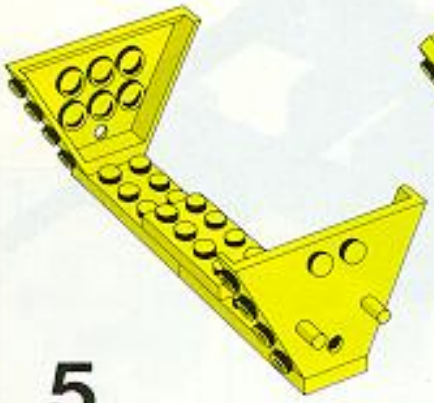

5

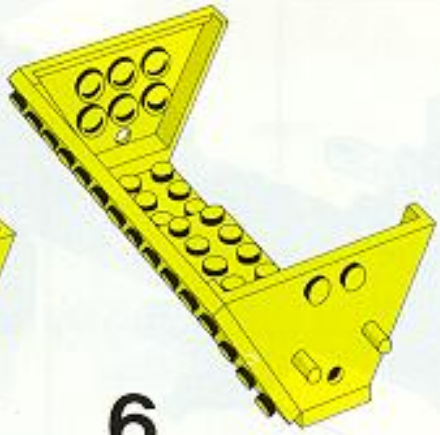

6

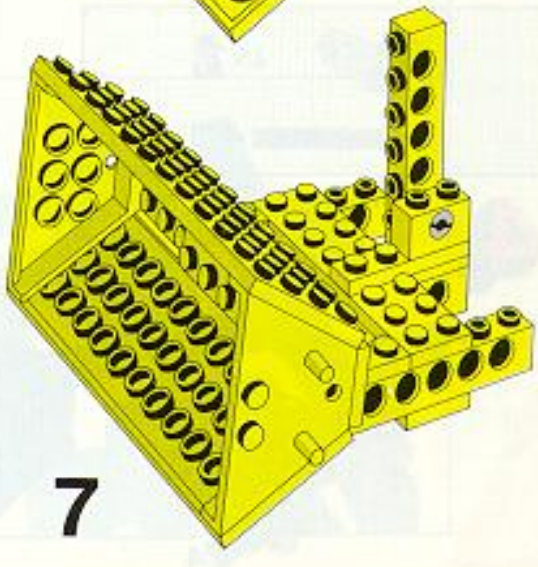

7

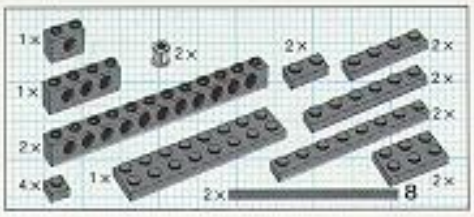

1

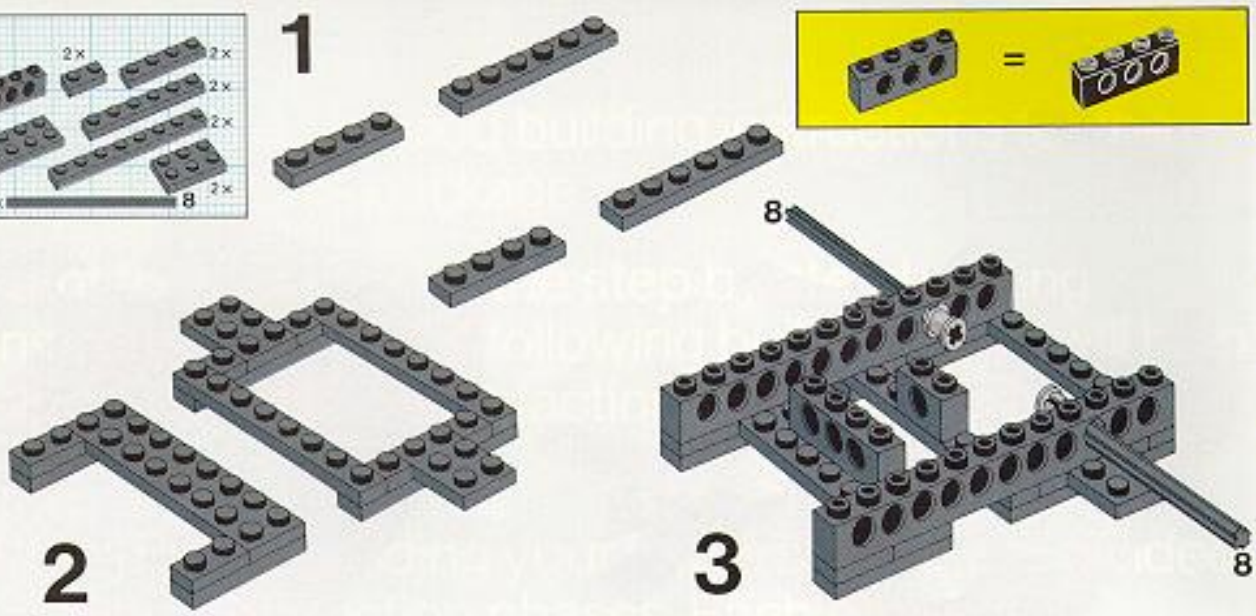

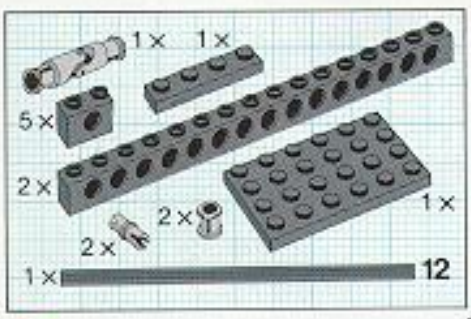

2

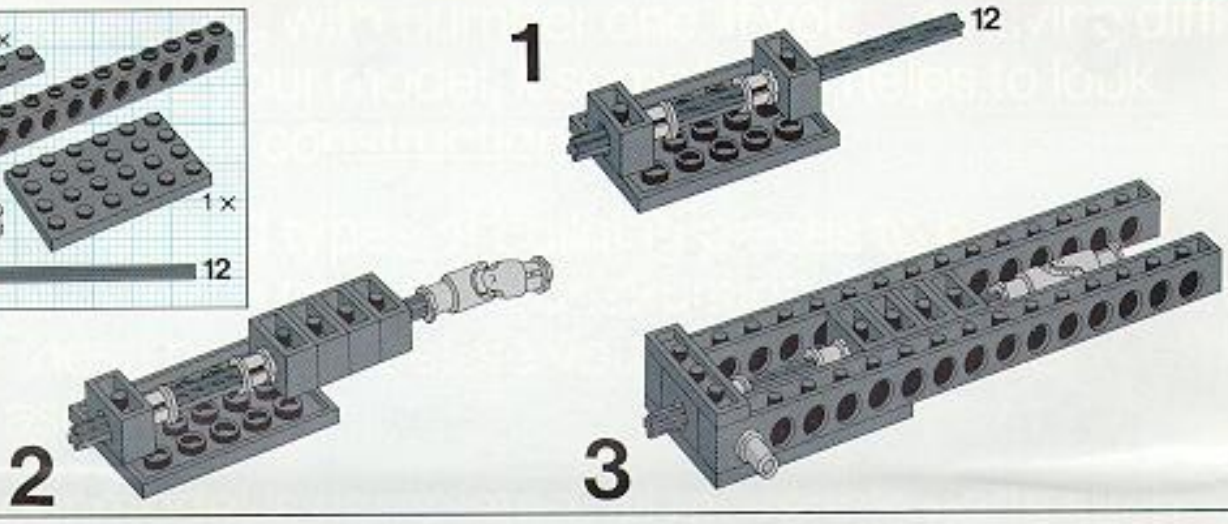

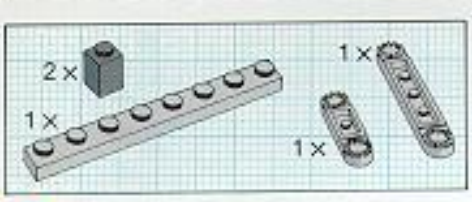

3

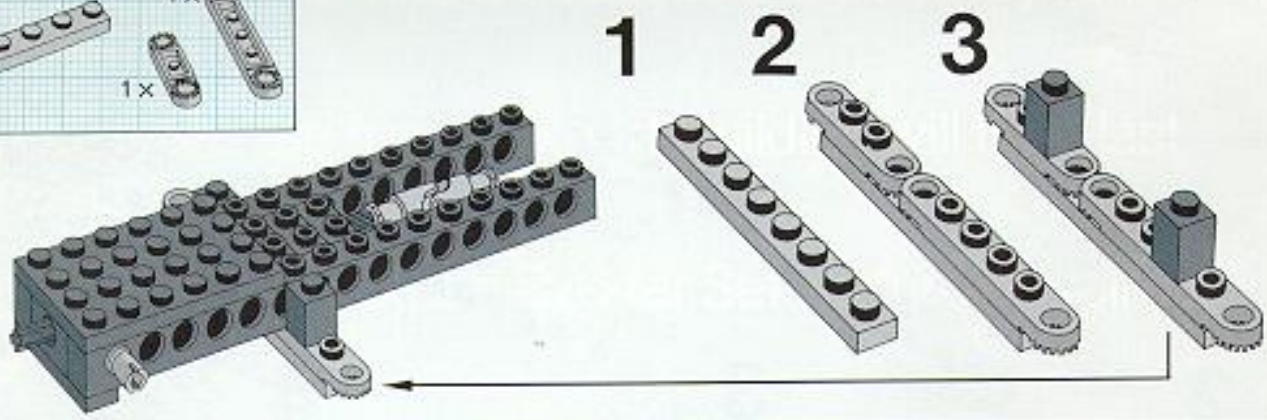

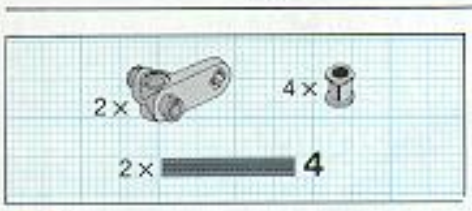

4

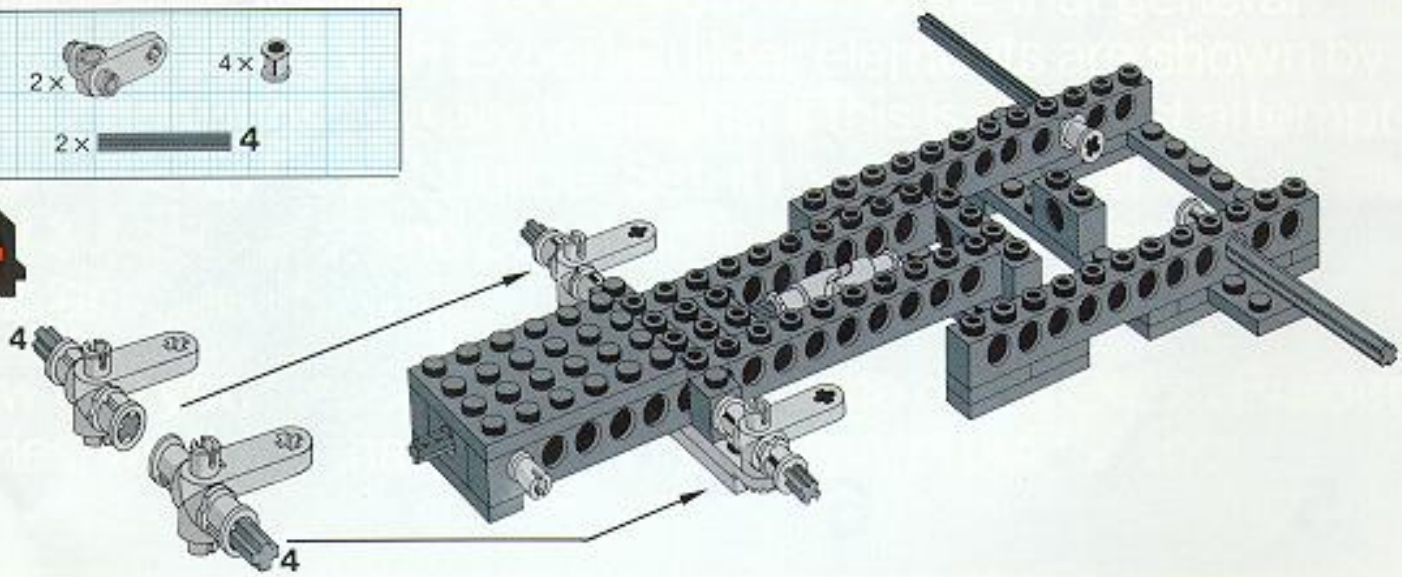

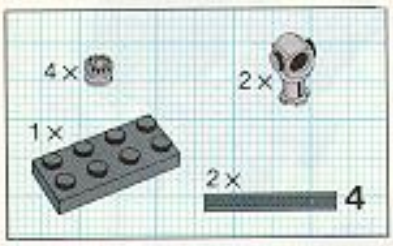

5

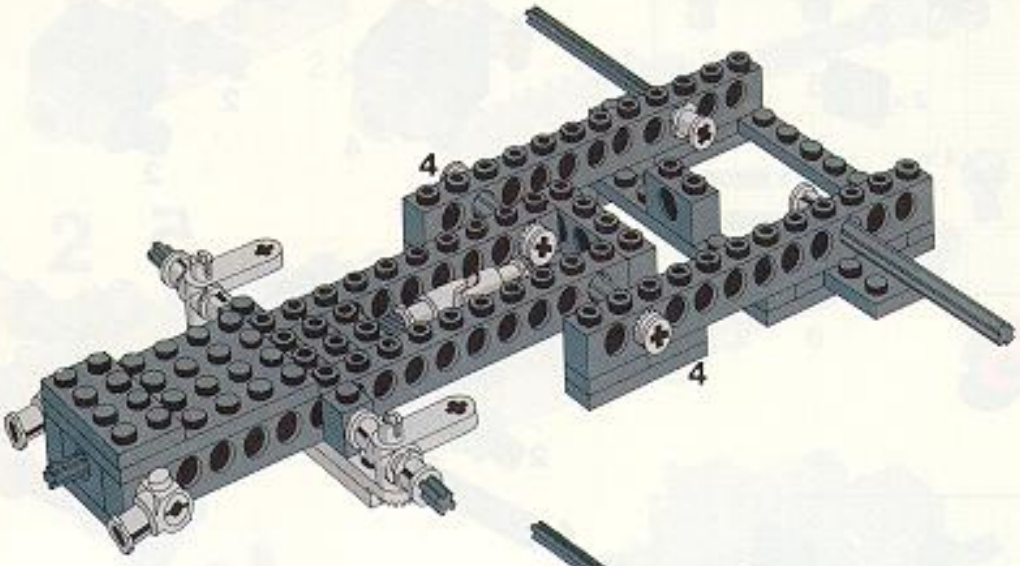

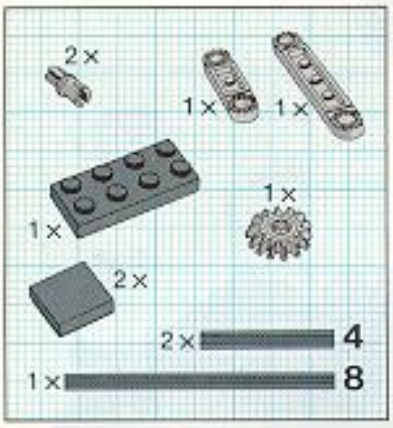

6

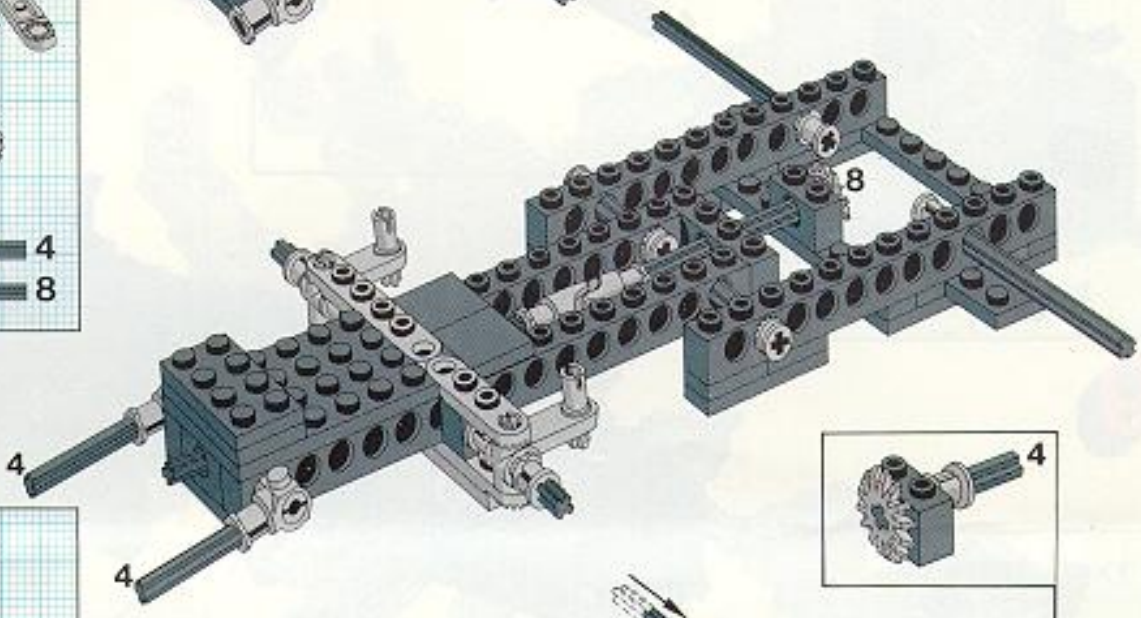

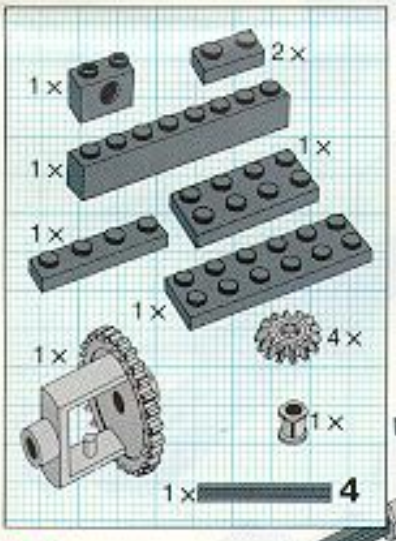

7

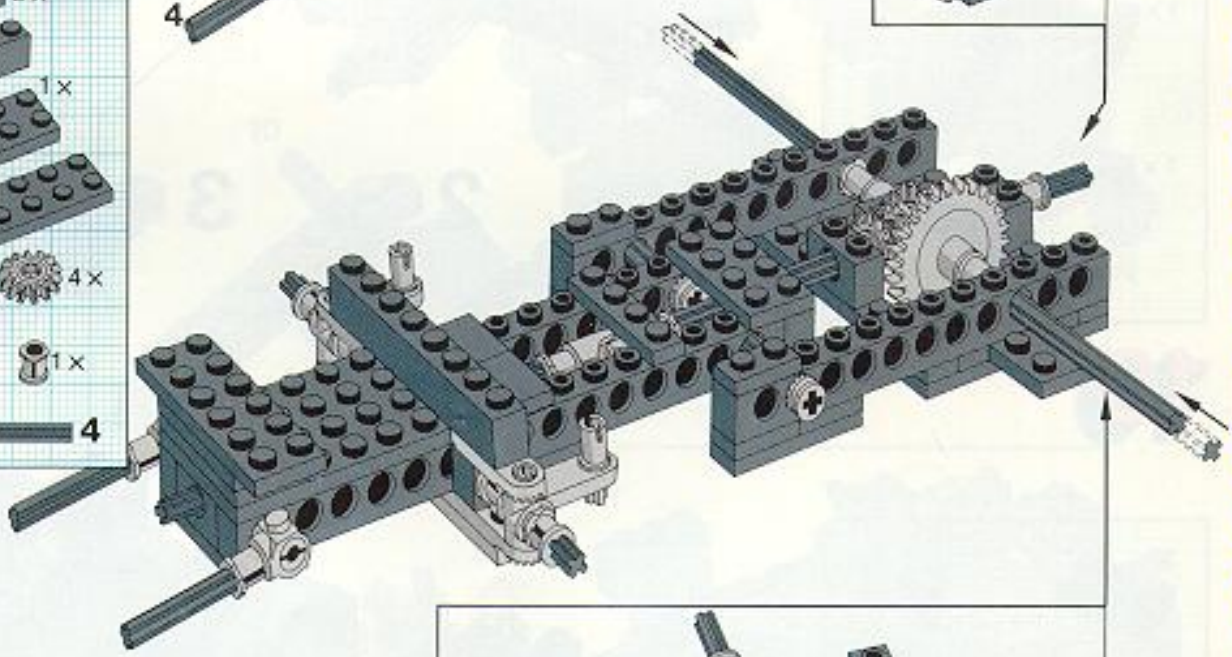

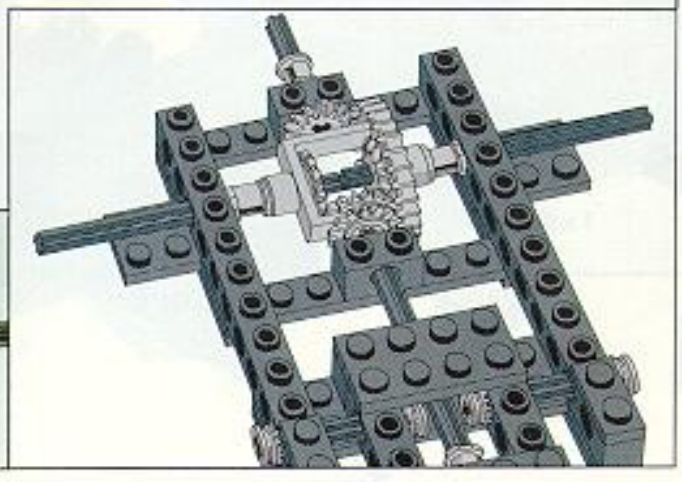

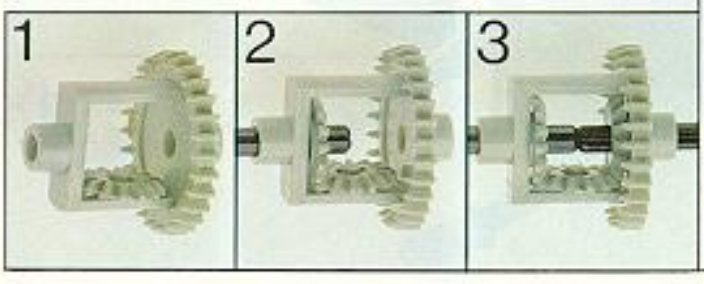

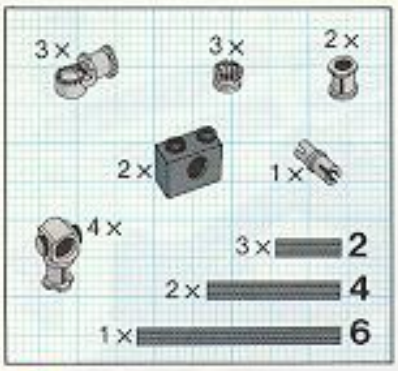

8

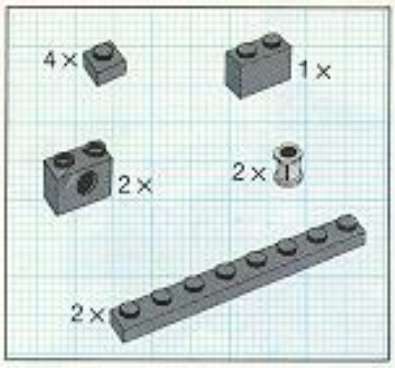

9

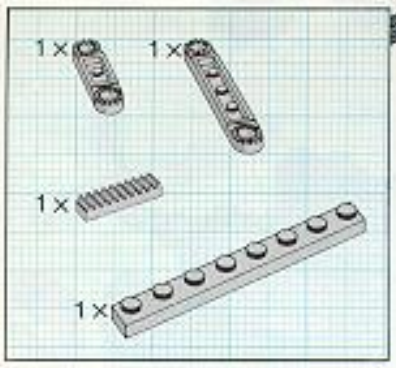

10

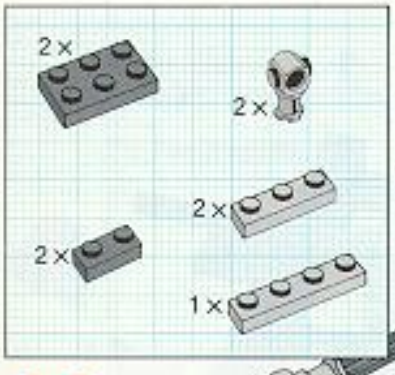

11

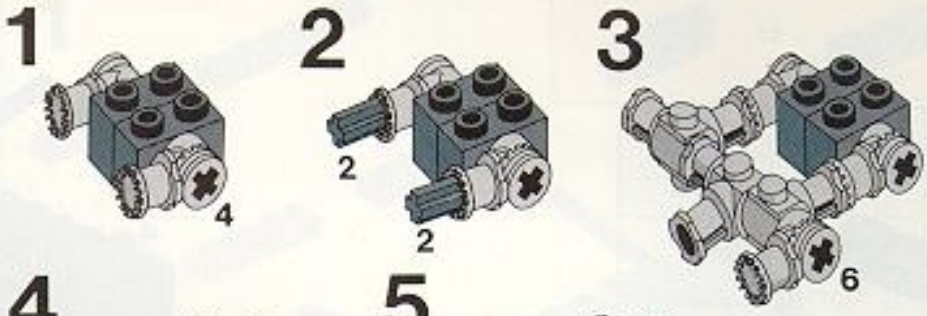

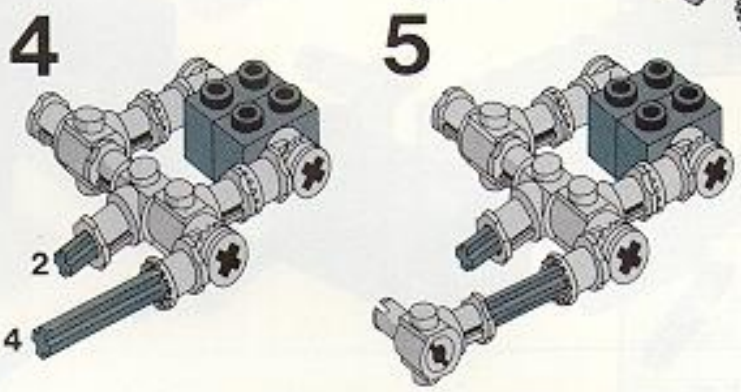

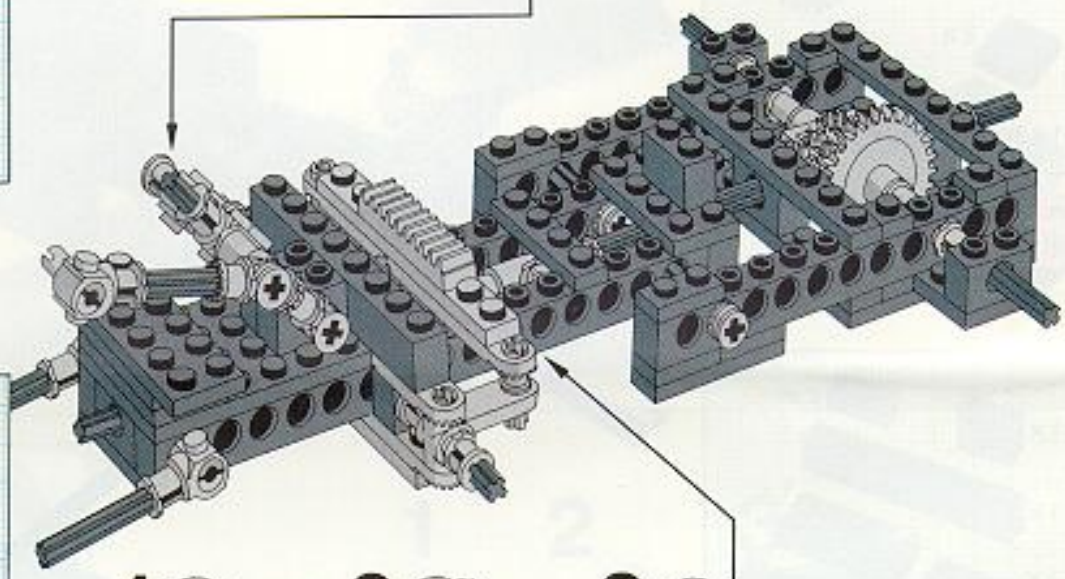

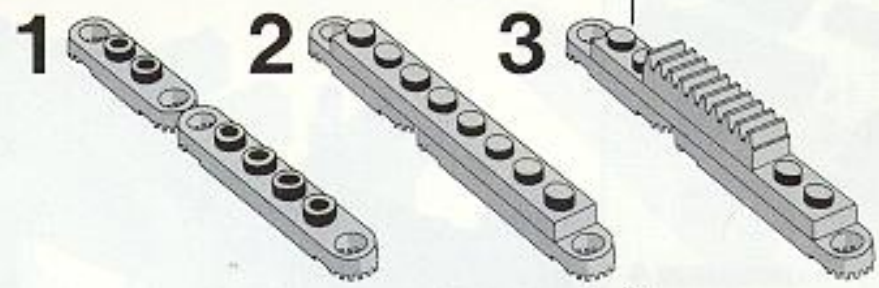

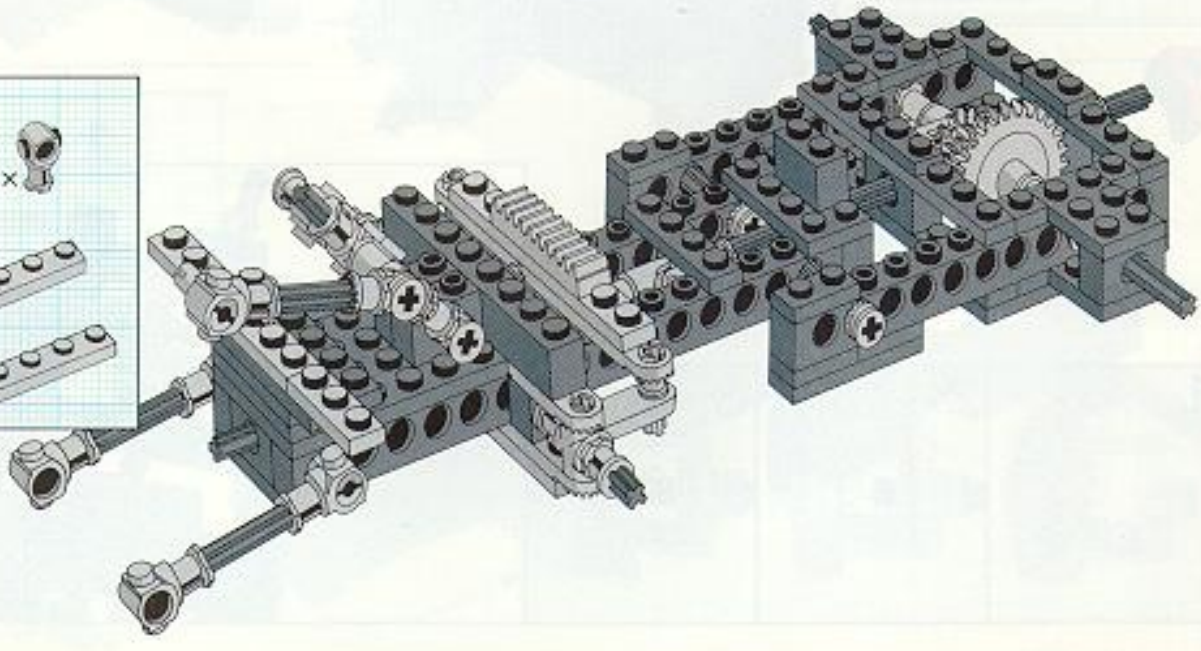

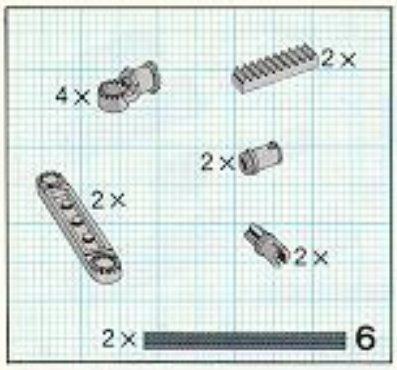

12

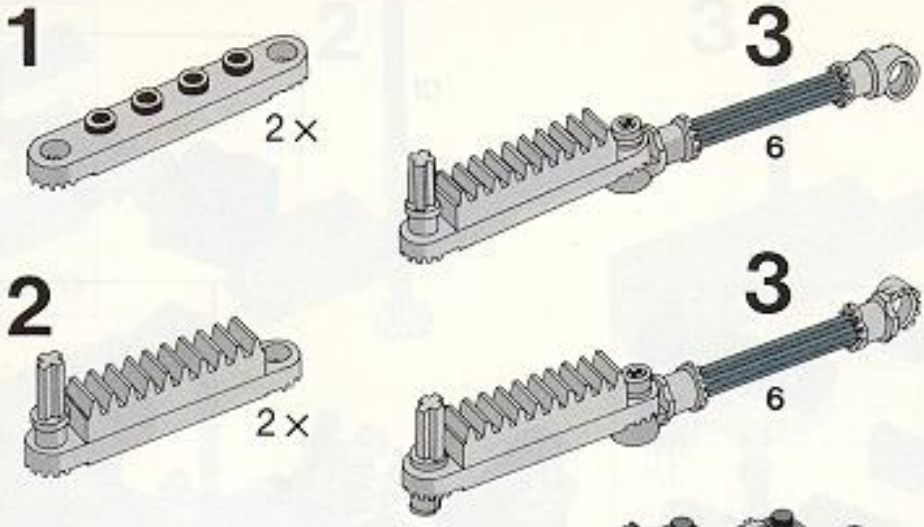

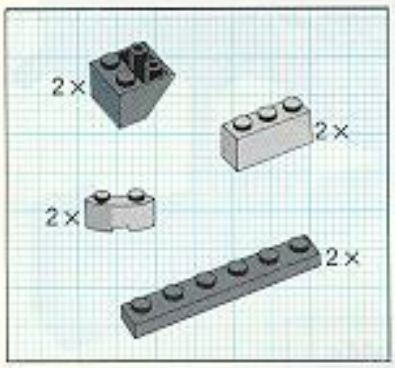

13

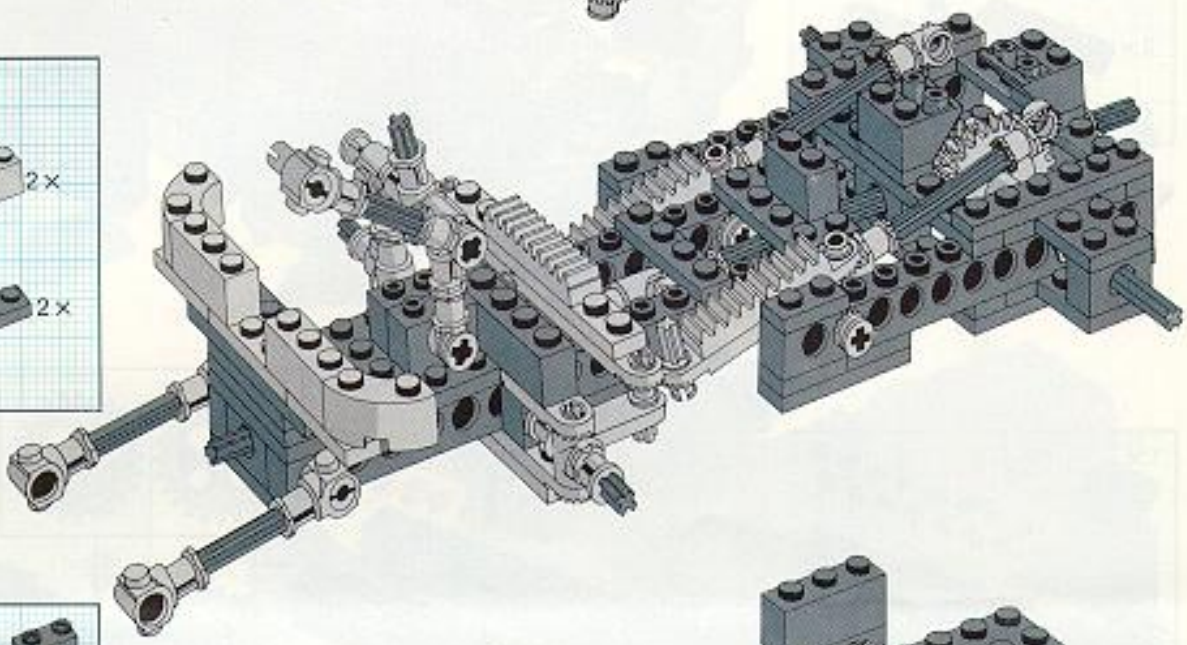

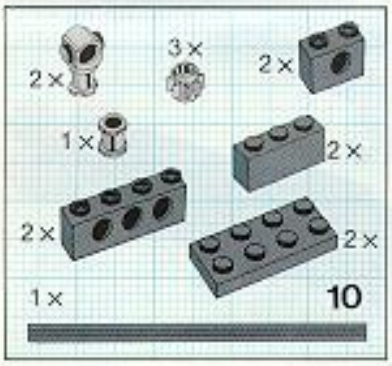

14

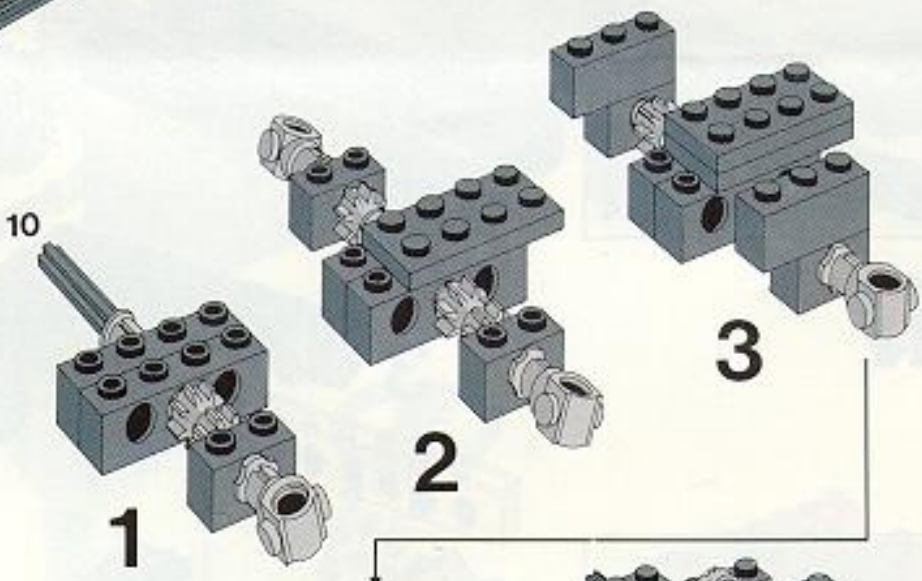

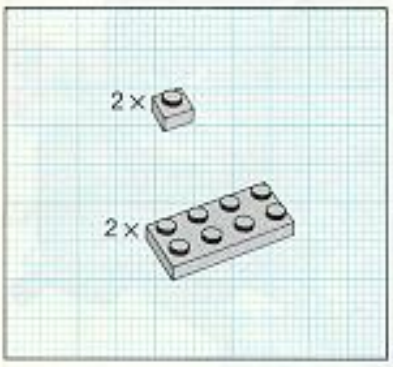

15

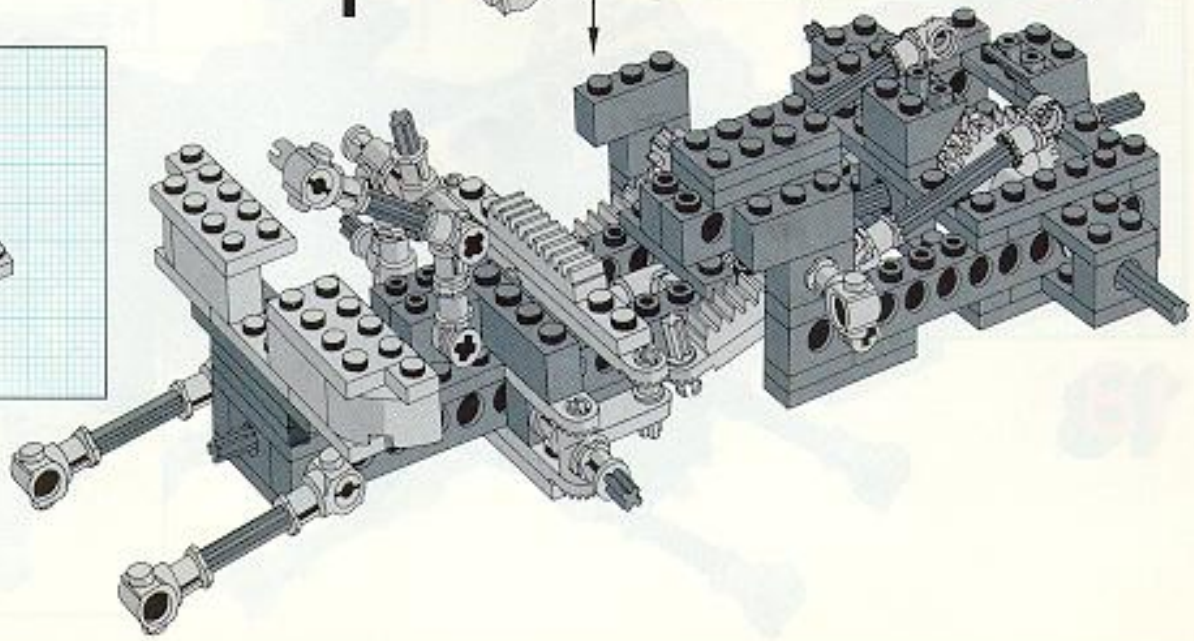

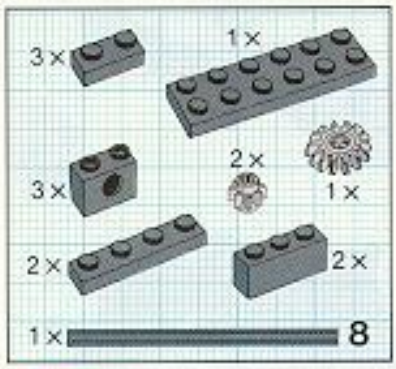

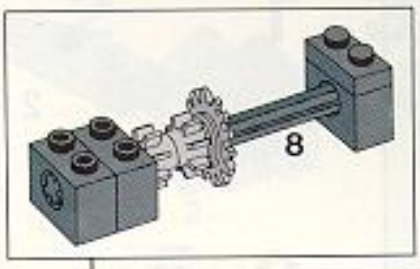

16

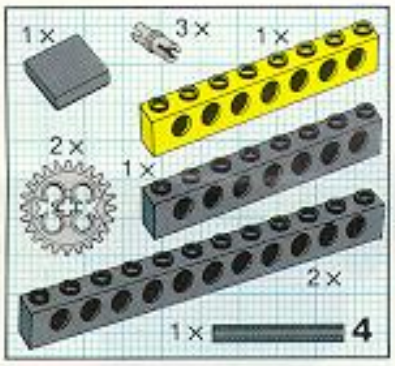

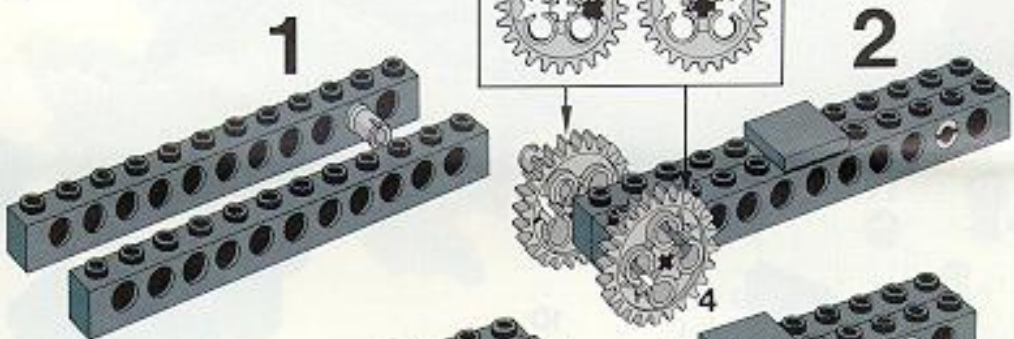

17

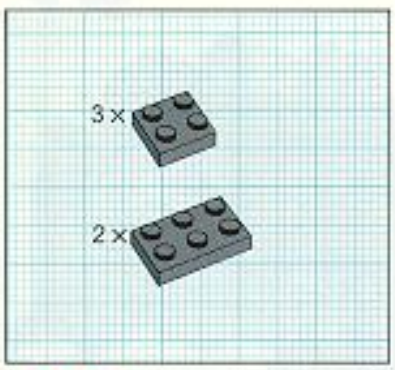

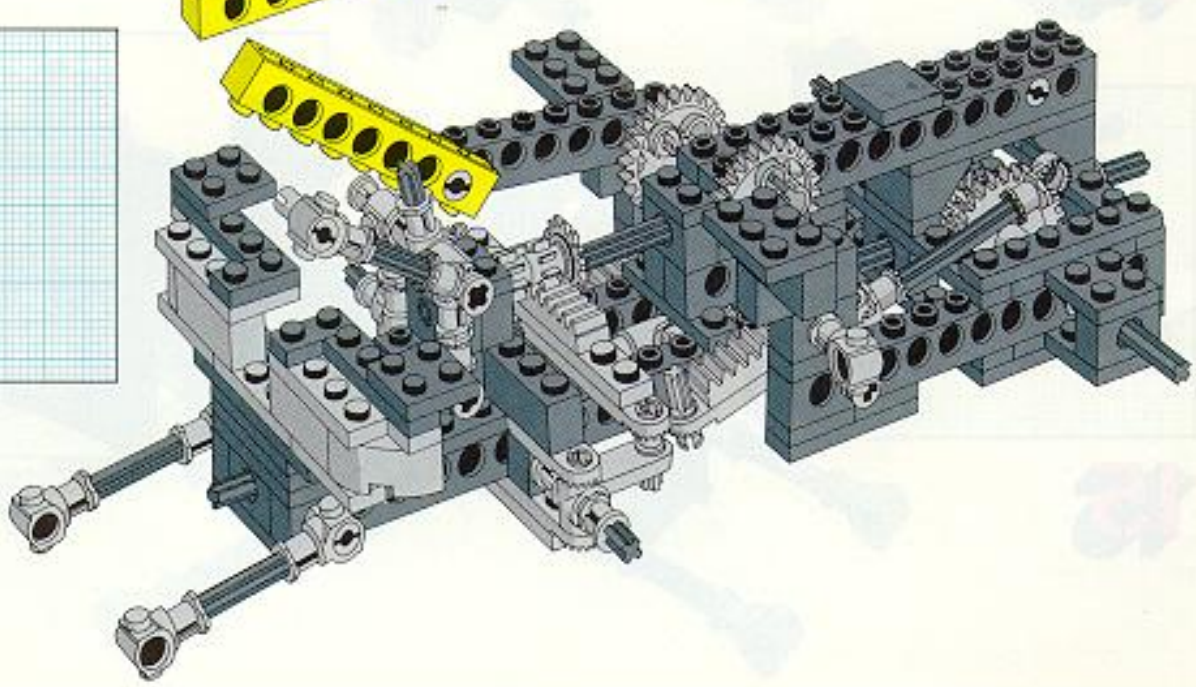

18

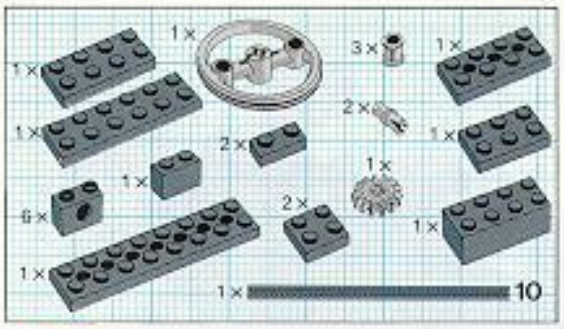

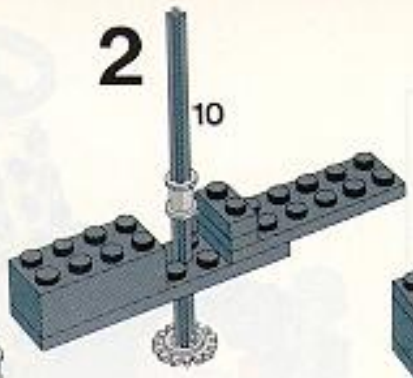

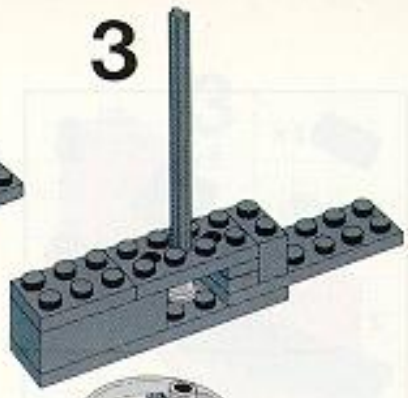

19

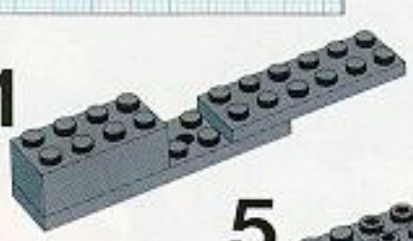

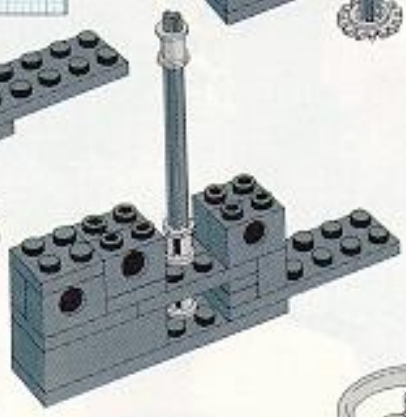

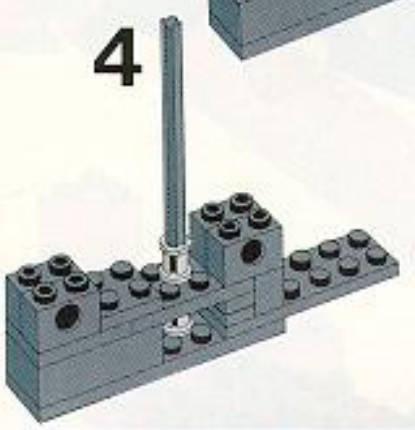

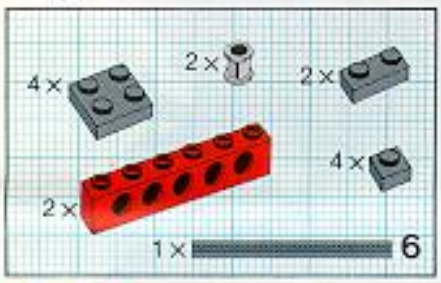

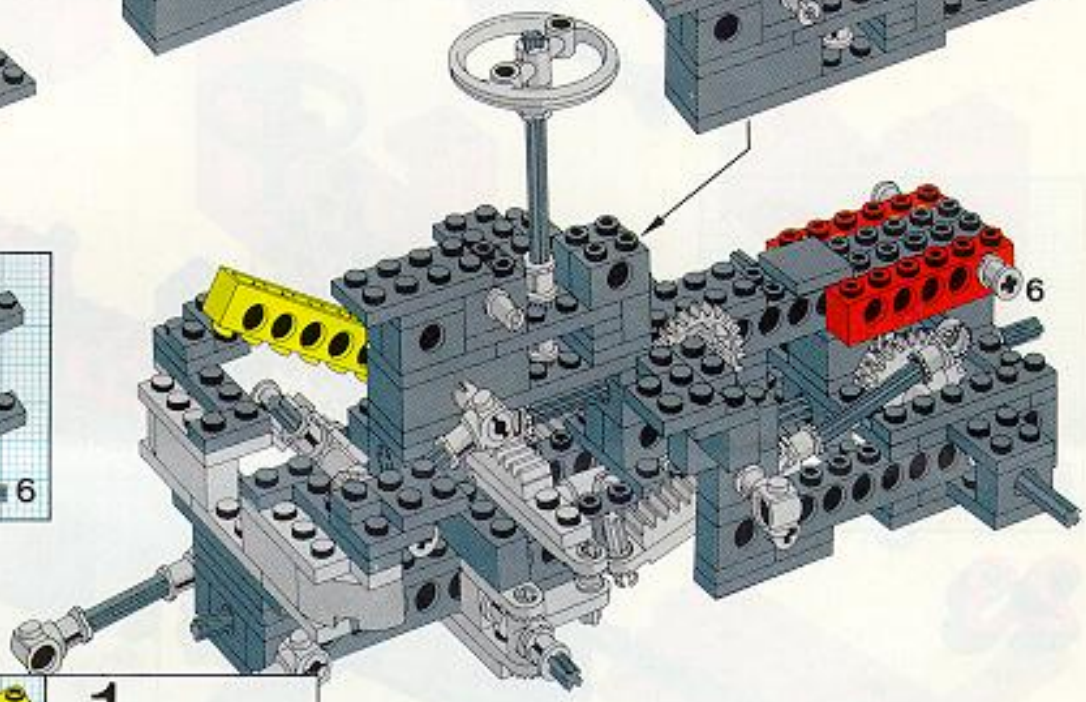

20

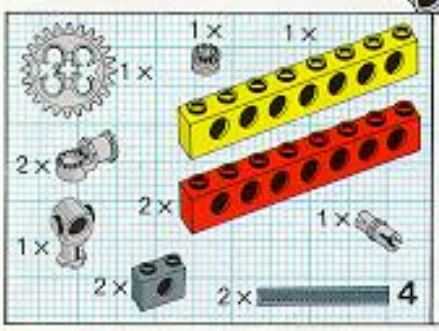

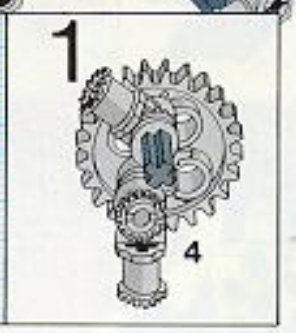

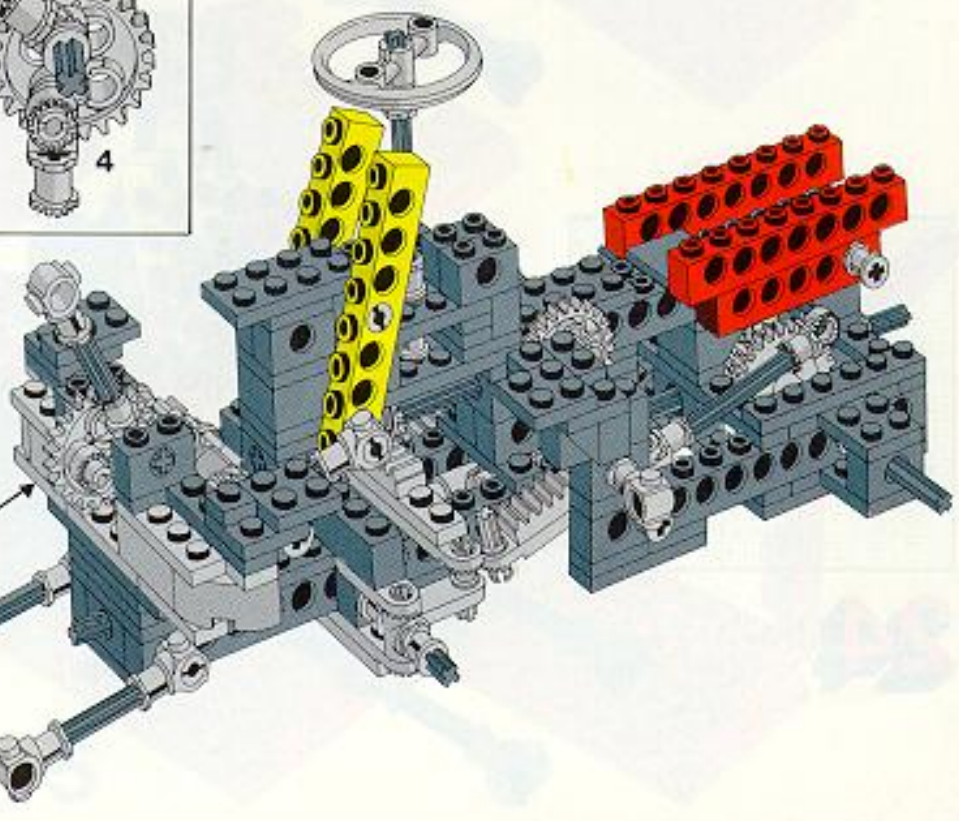

21

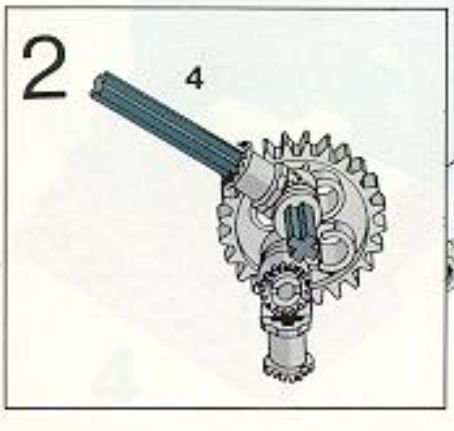

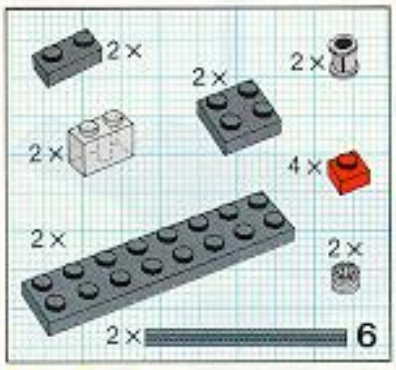

22

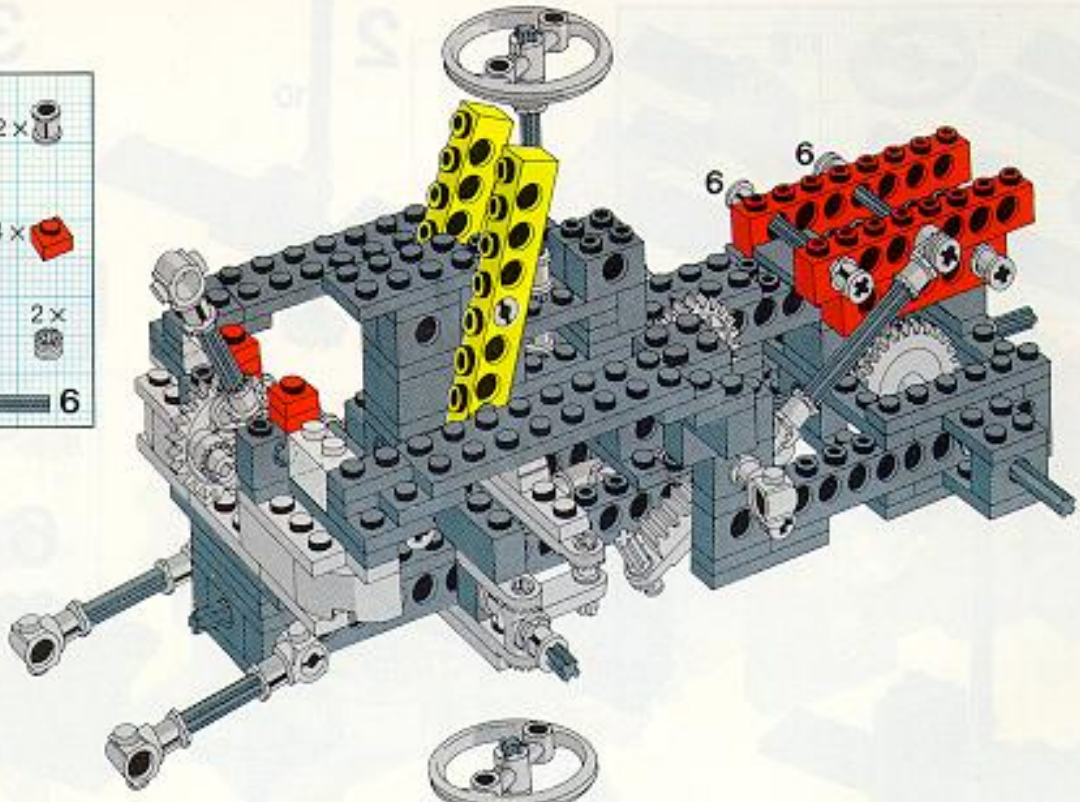

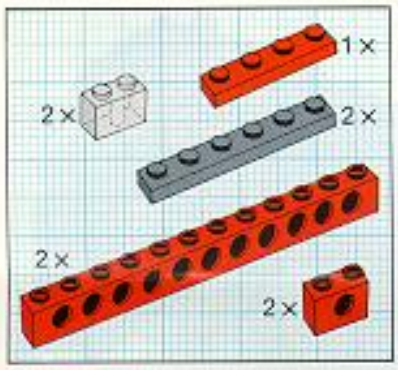

23

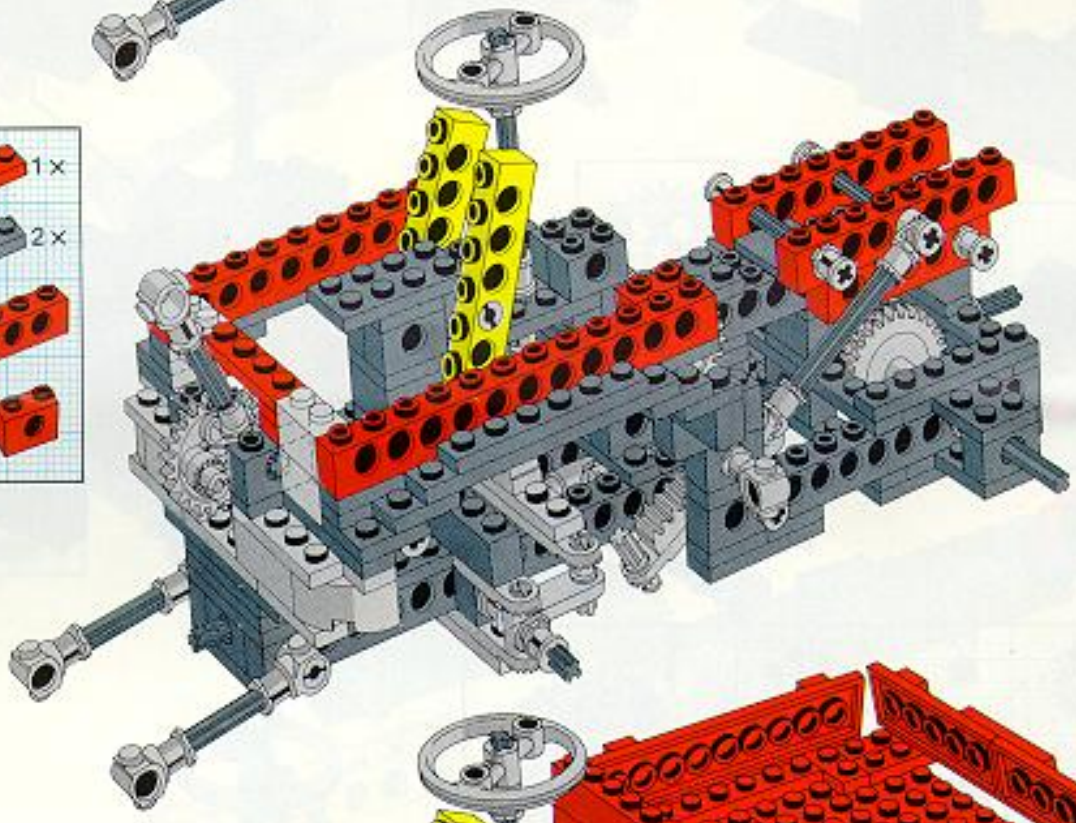

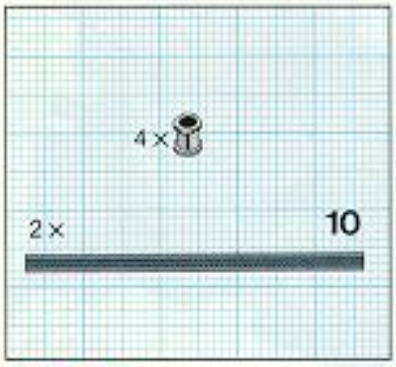

24

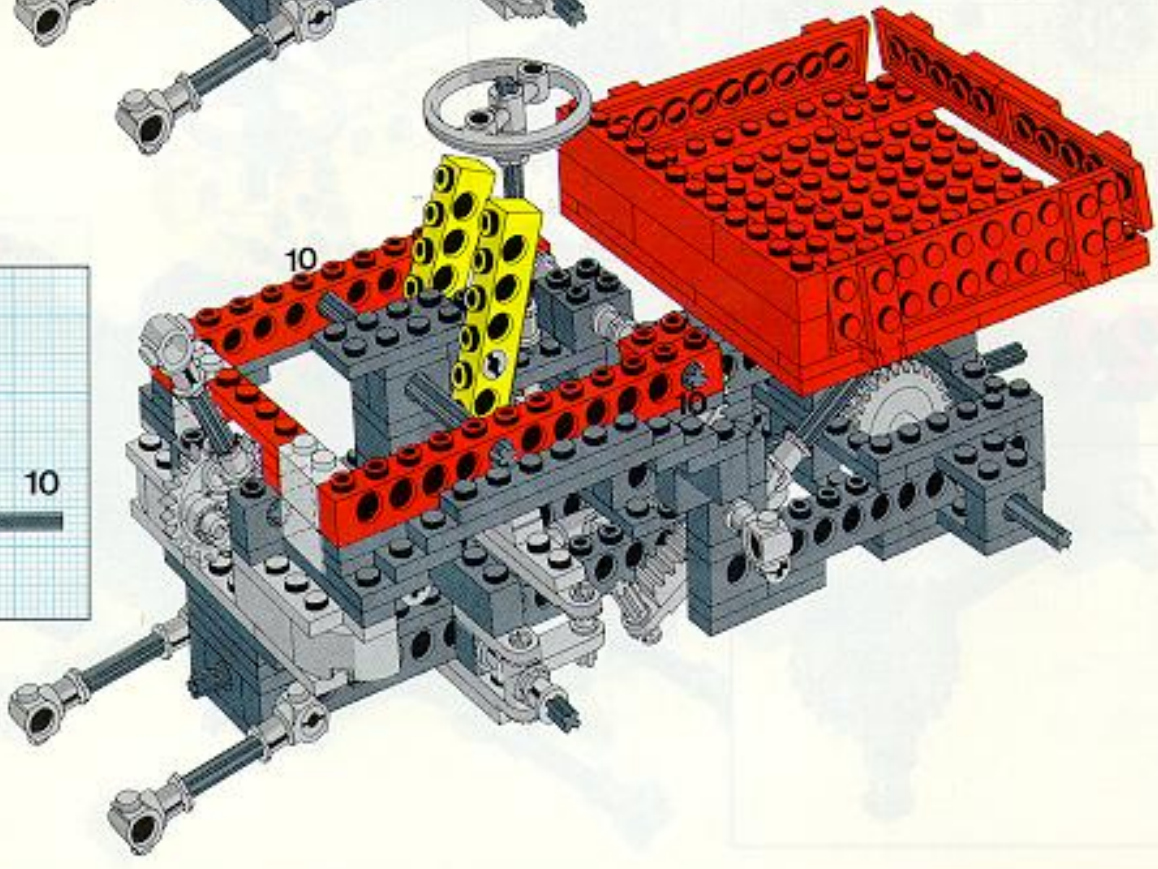

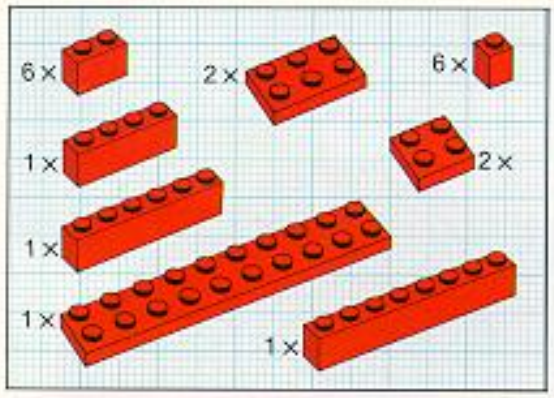

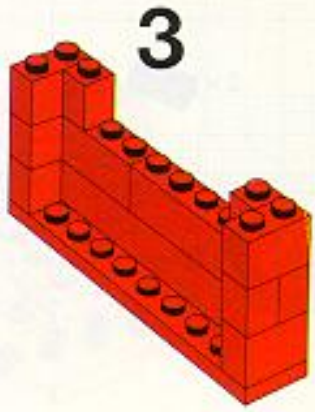

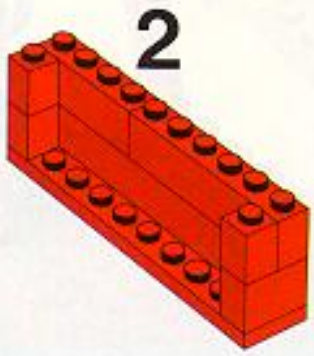

25

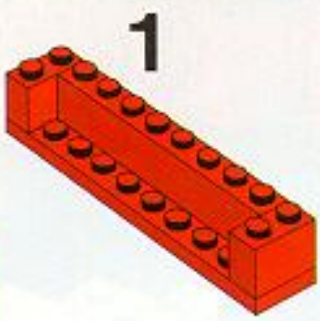

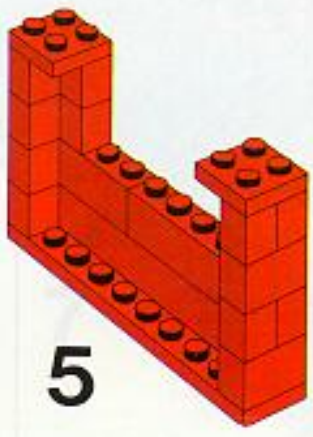

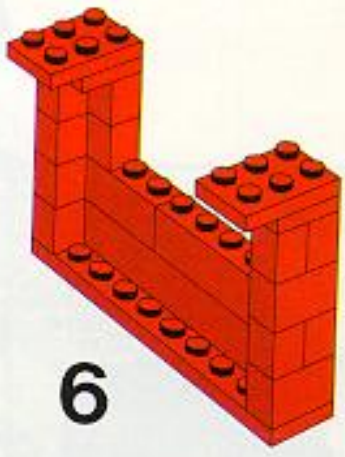

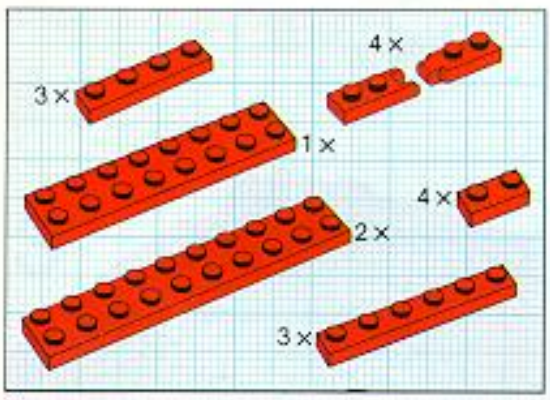

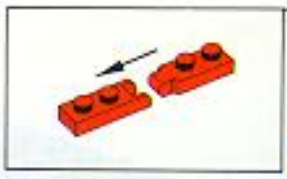

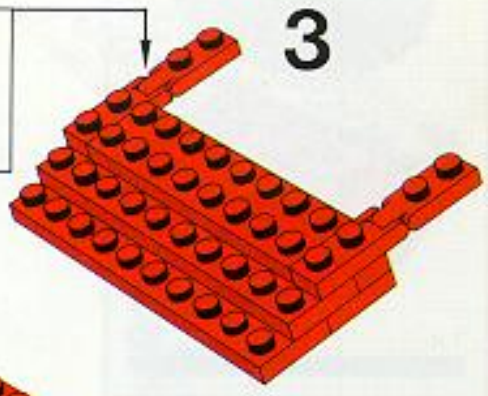

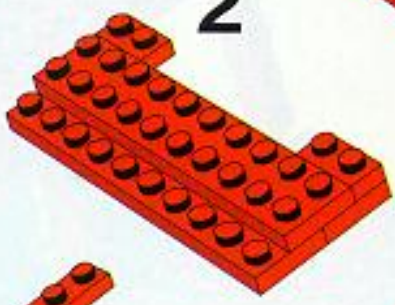

26

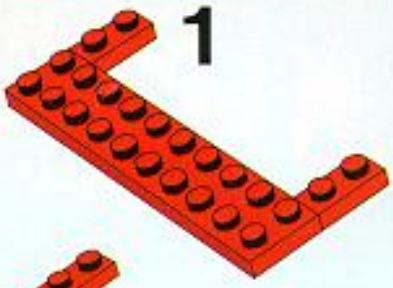

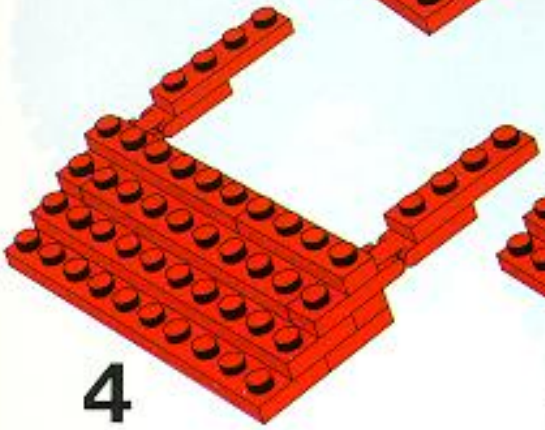

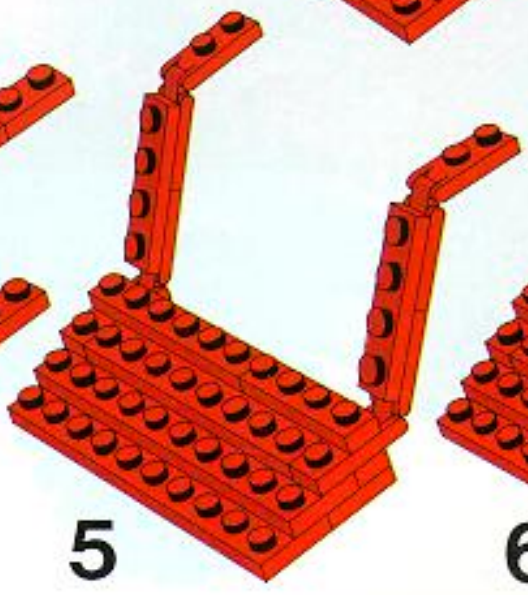

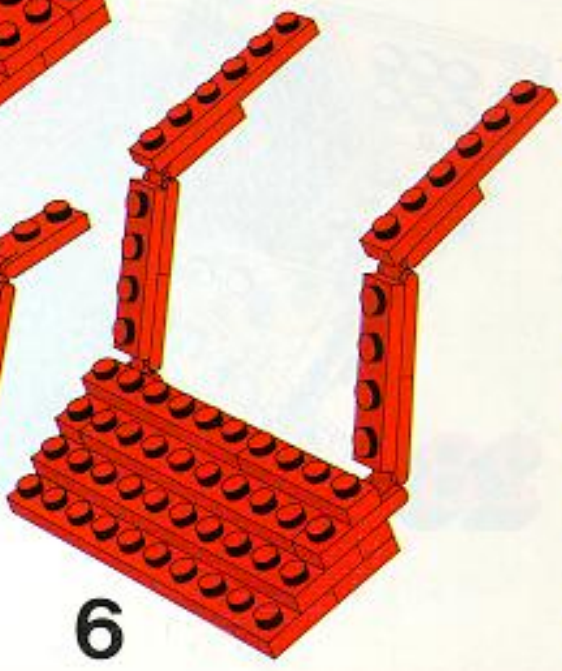

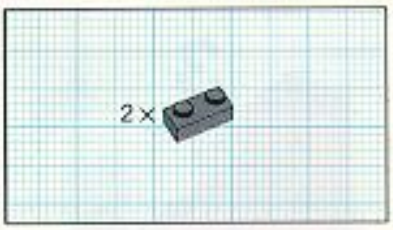

27

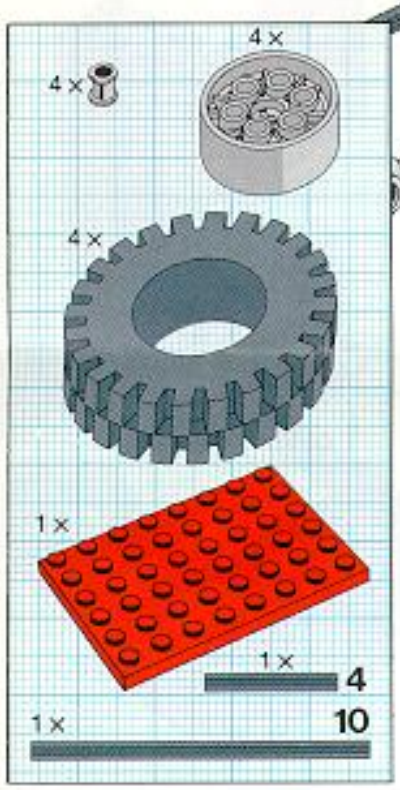

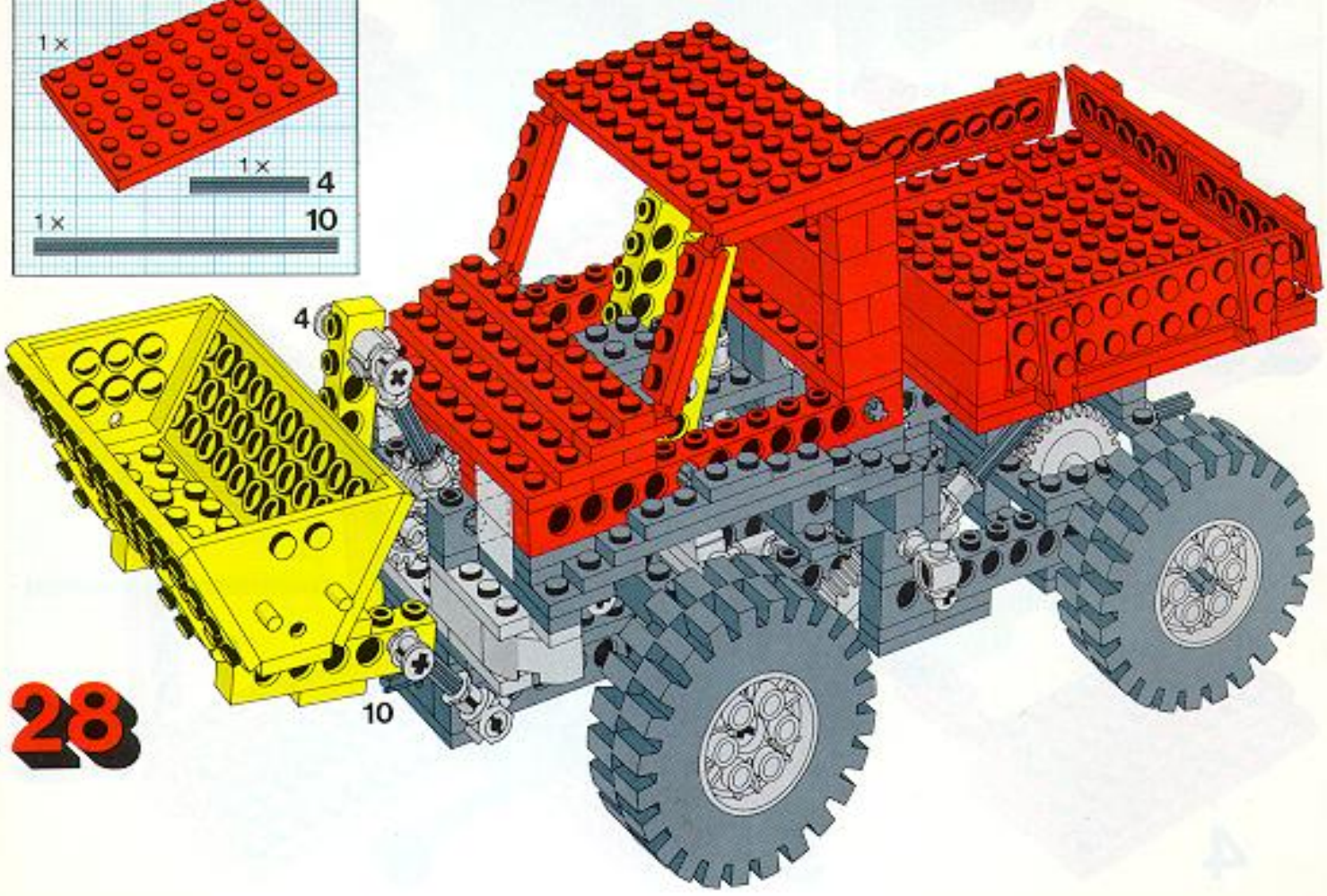

28

1

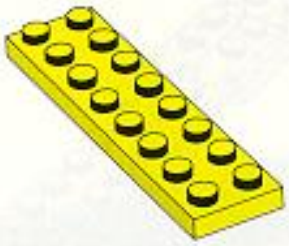

2

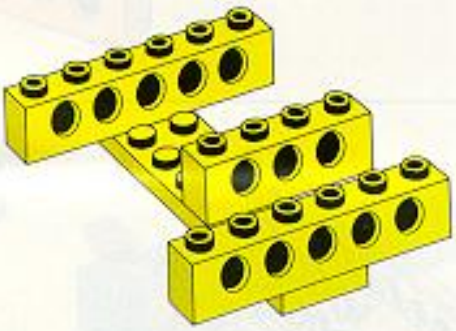

3

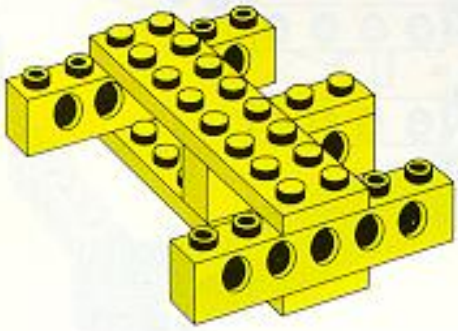

4

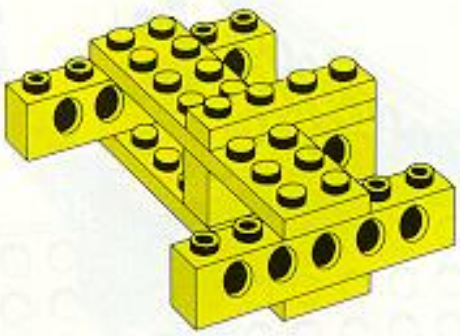

5

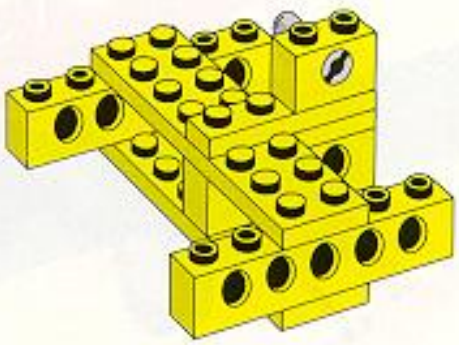

6

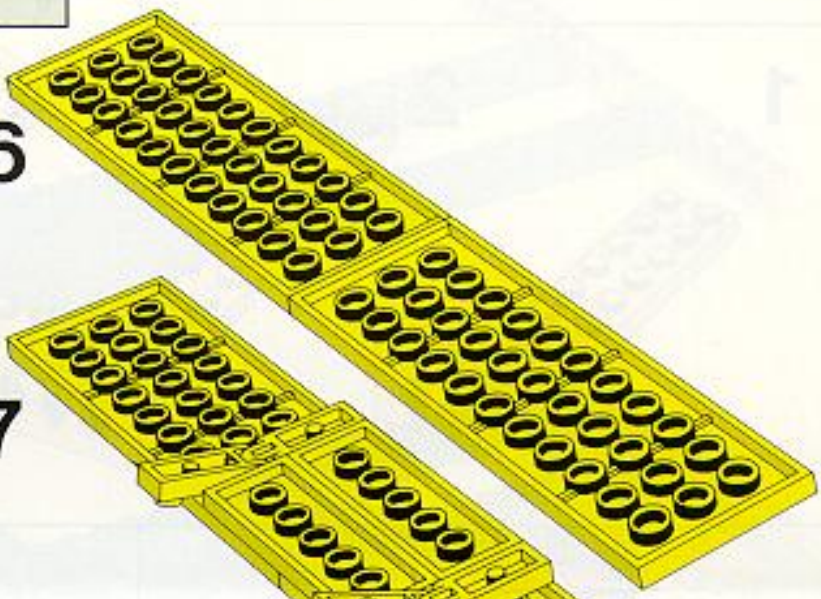

7

8

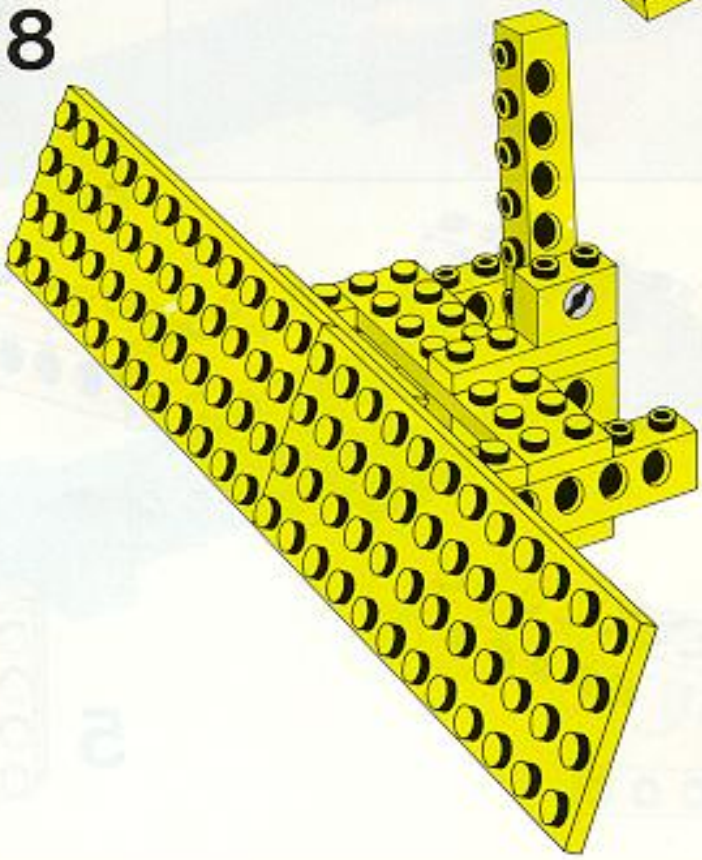

3

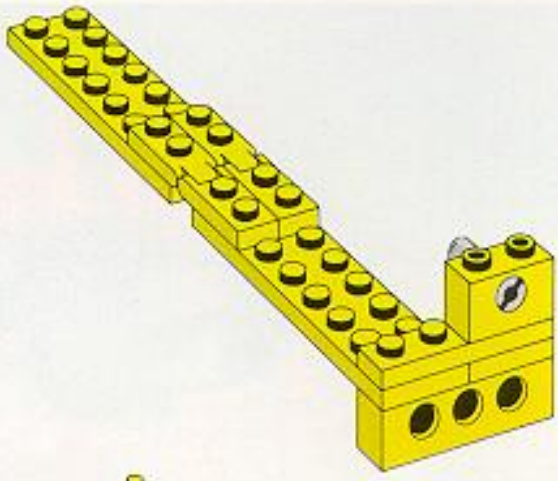

4

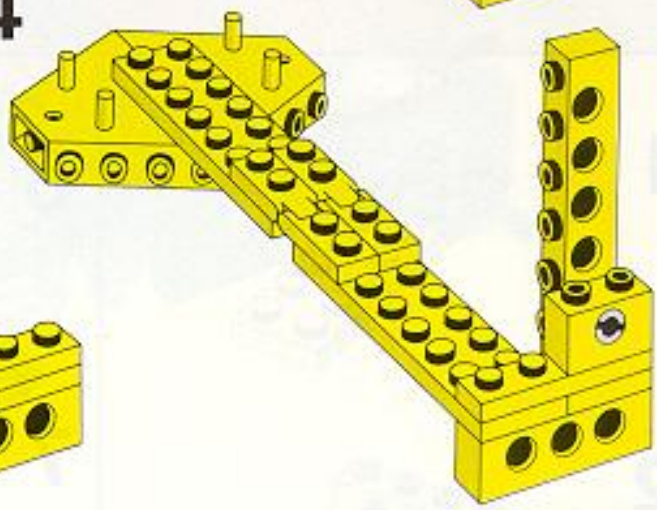

1

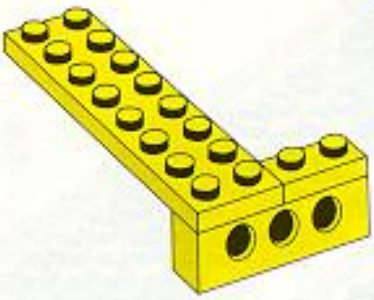

2

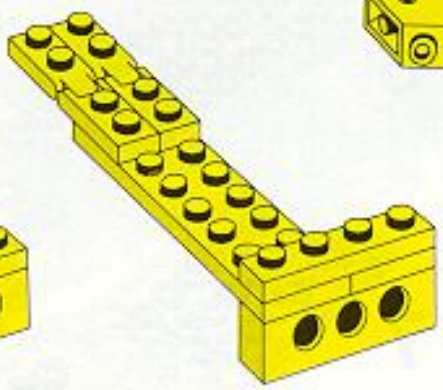

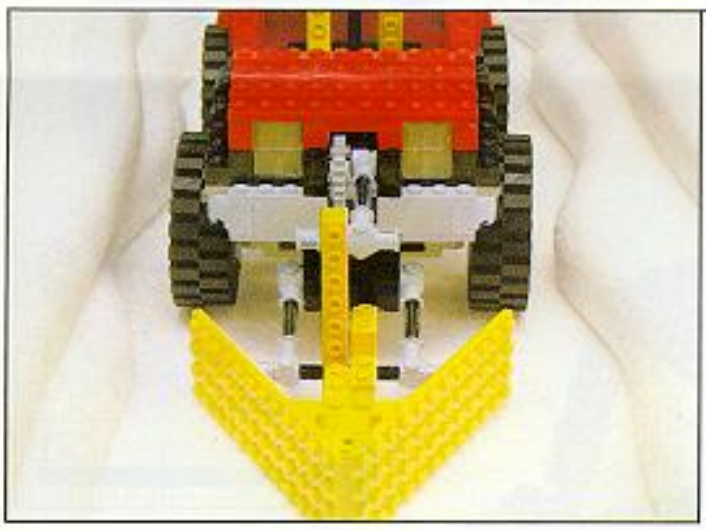

4

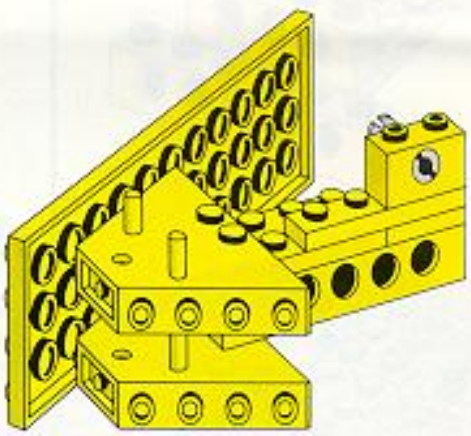

1

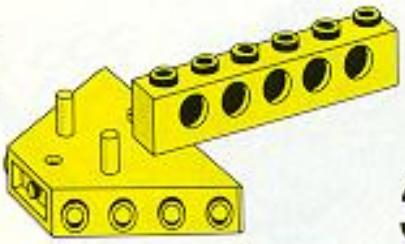

3

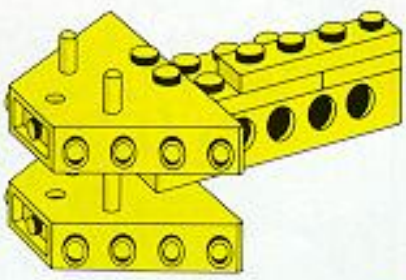

2

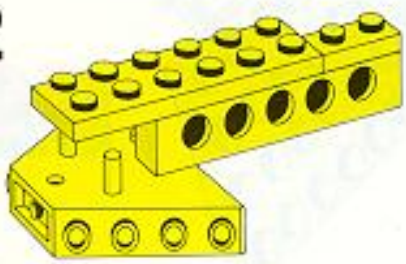

5

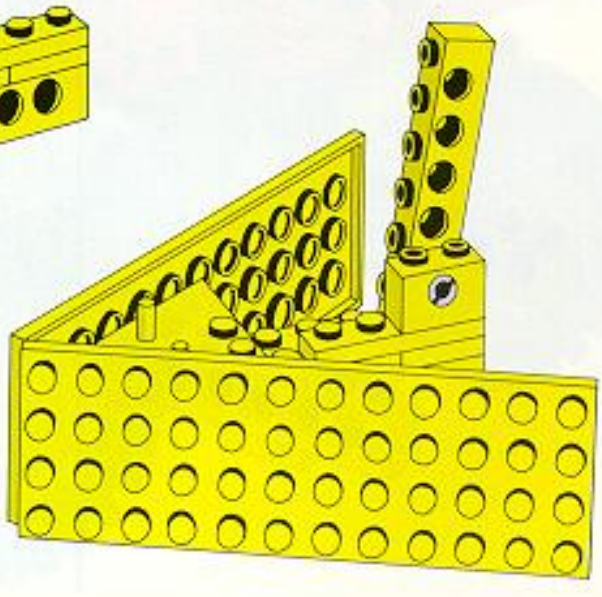

1

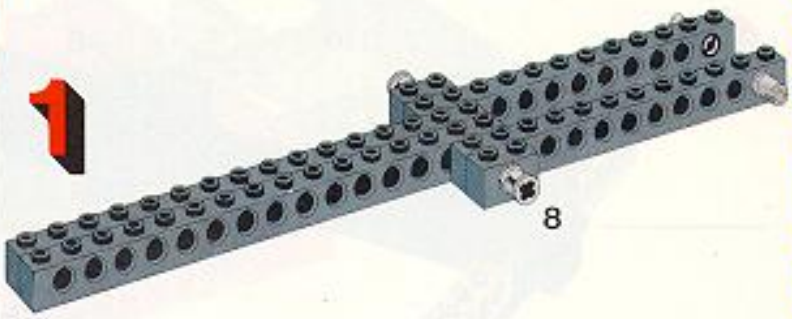

2

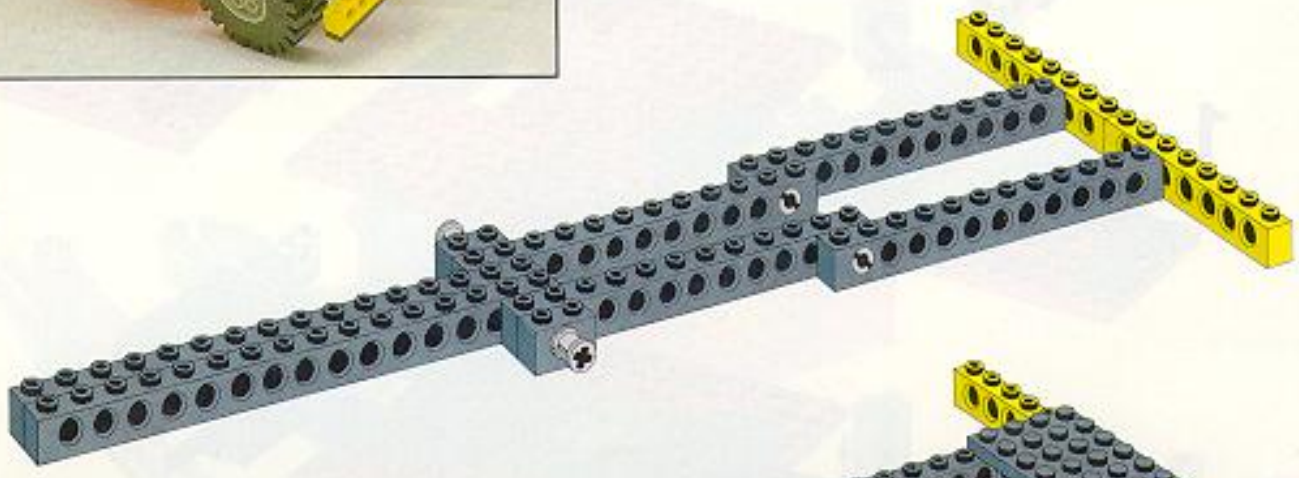

3

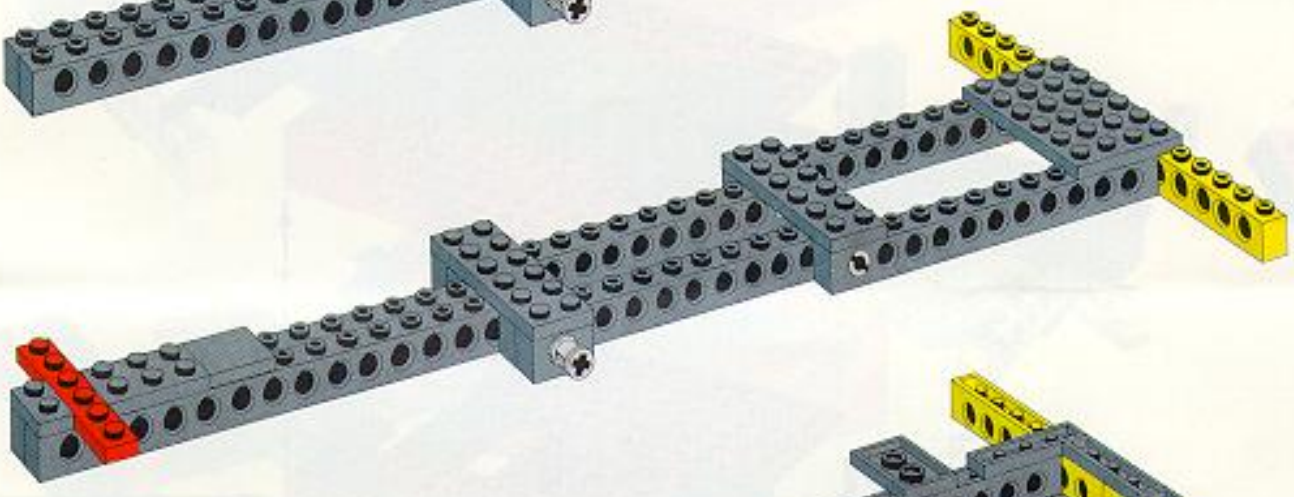

4

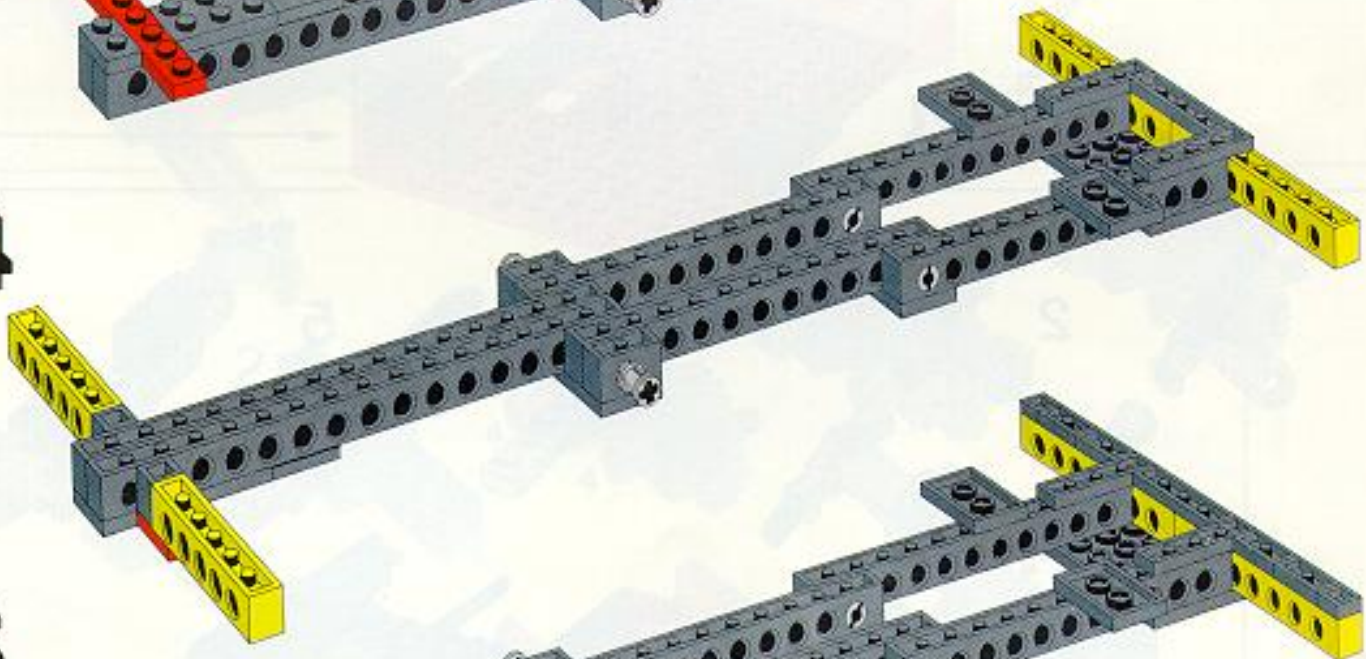

5

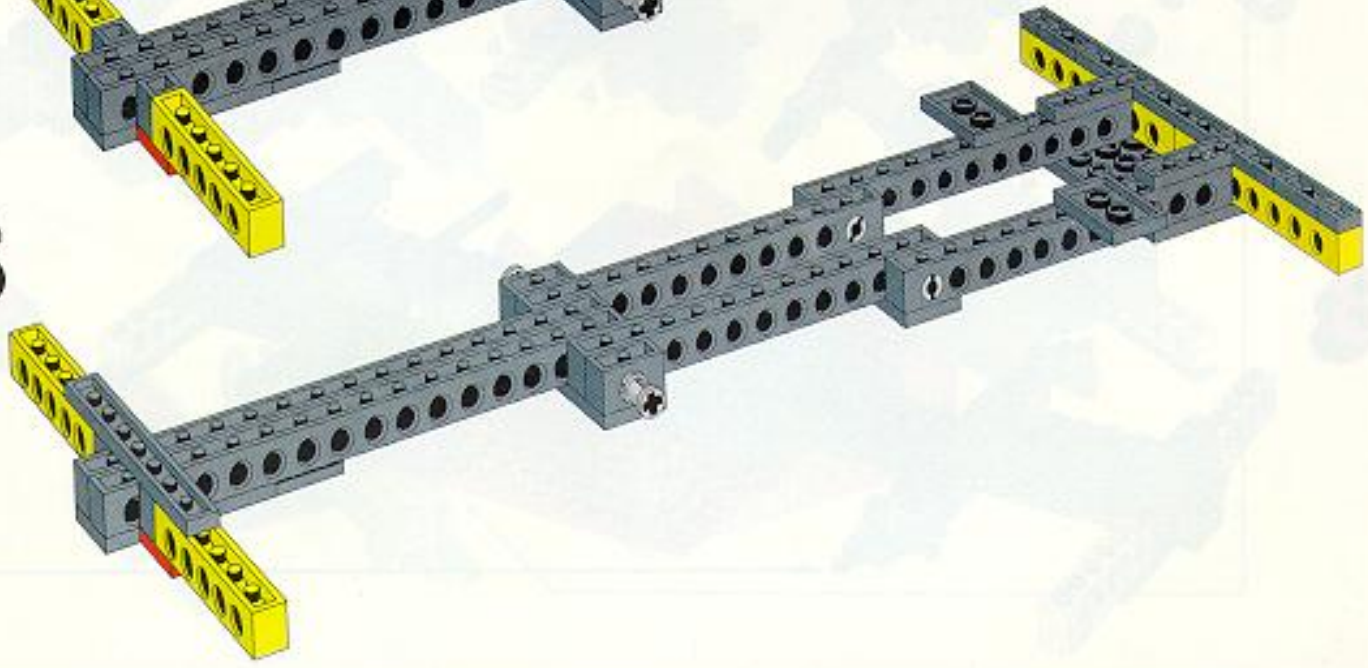

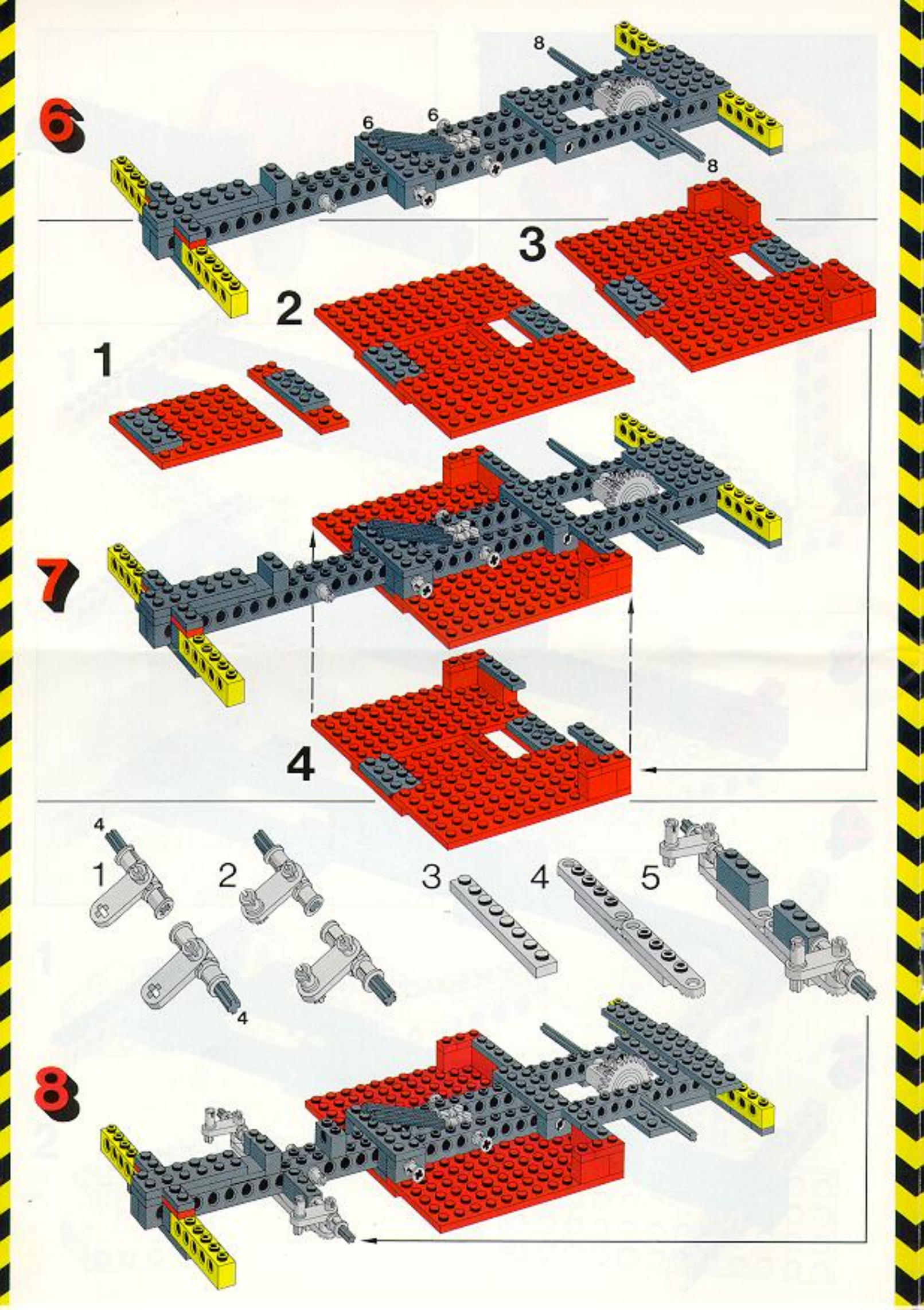
6
8
6
6
8
3
2
1
7
4
4
1
2
3
4
5
4
8

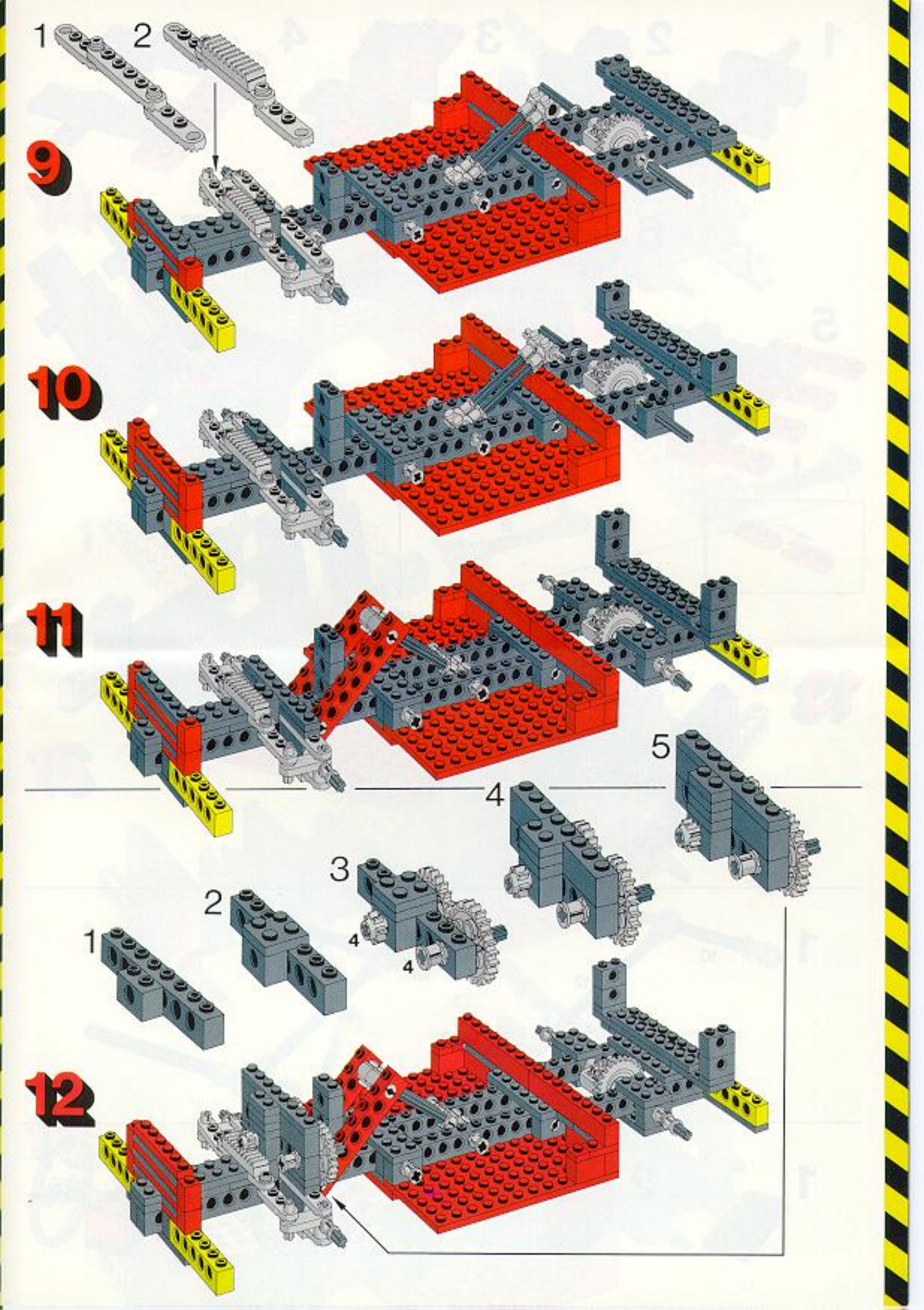
1
2
9
10
11
5
4
3
2
1
4
4
12

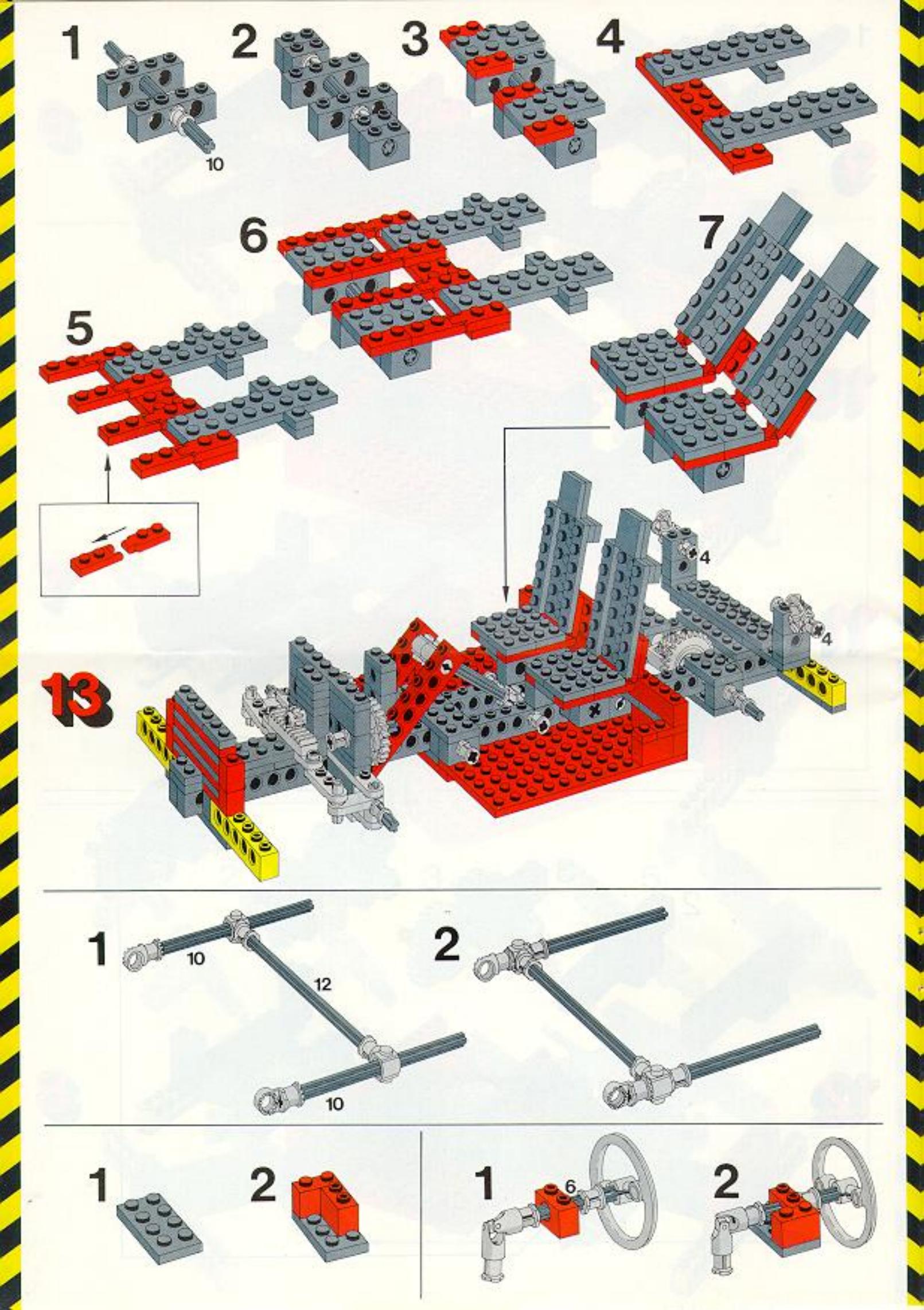
1
10
2
3
4
6
7
5
4
4
13

1
10
12
10
2

1
2

1
6
2

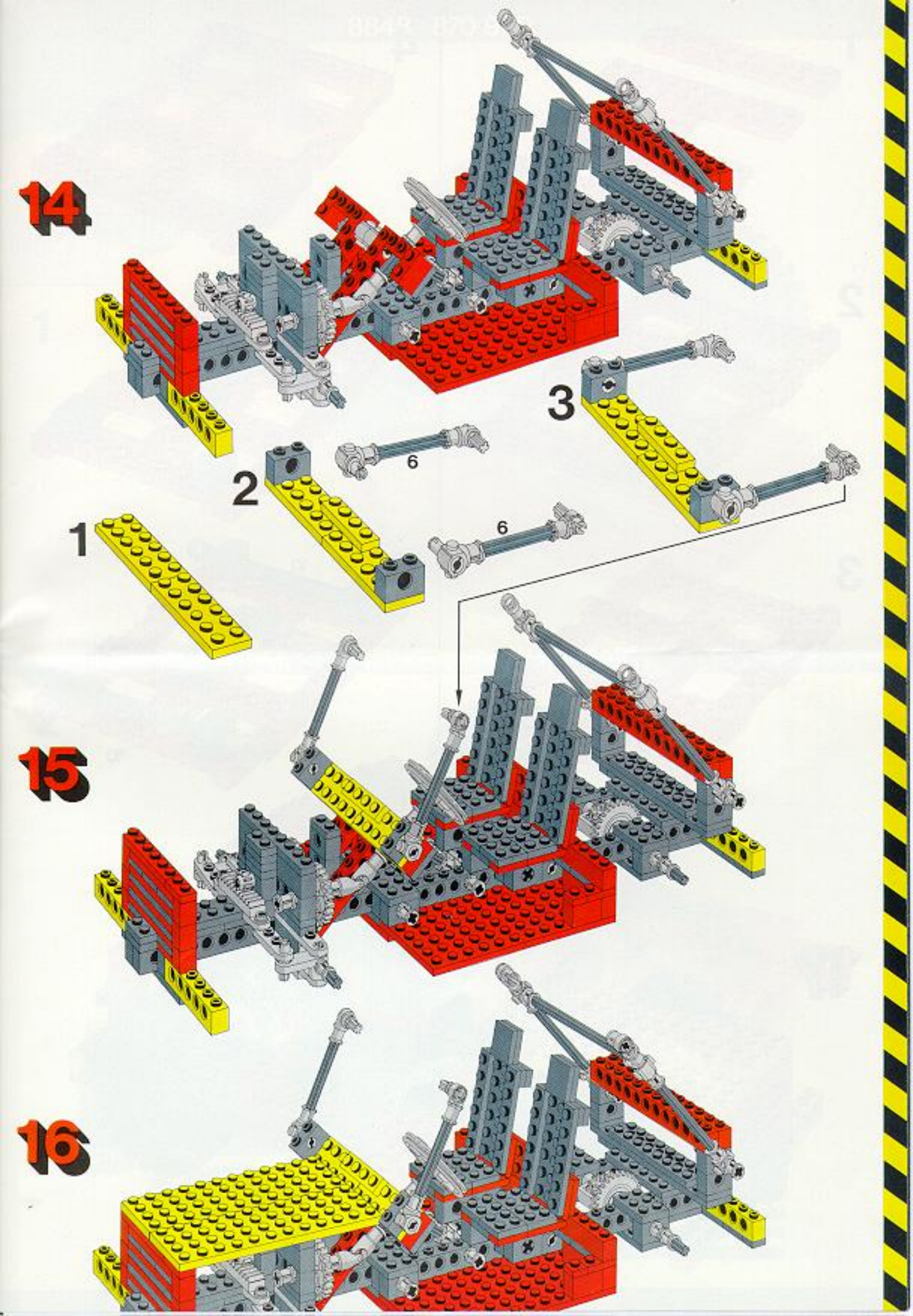
14
3
6
2
6
1
15
16

1

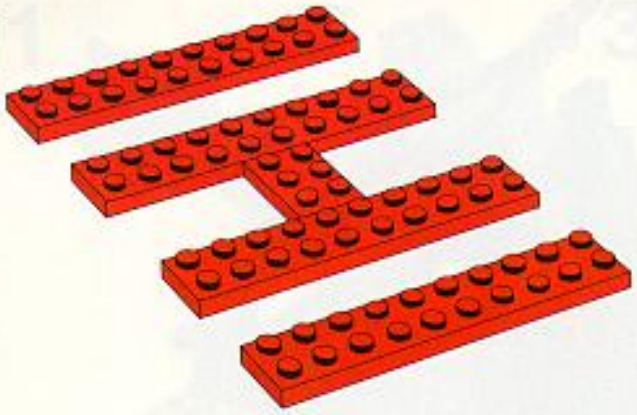

2

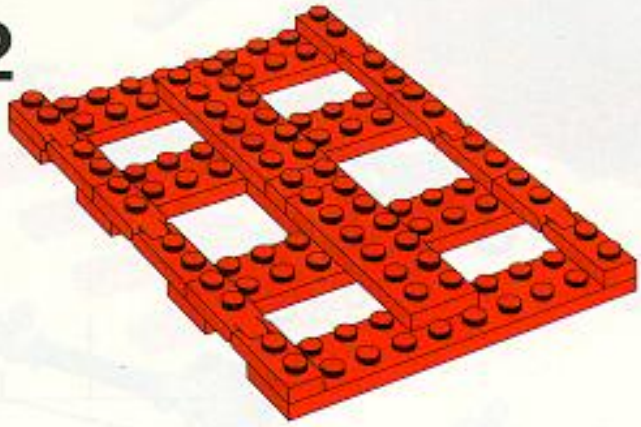

3

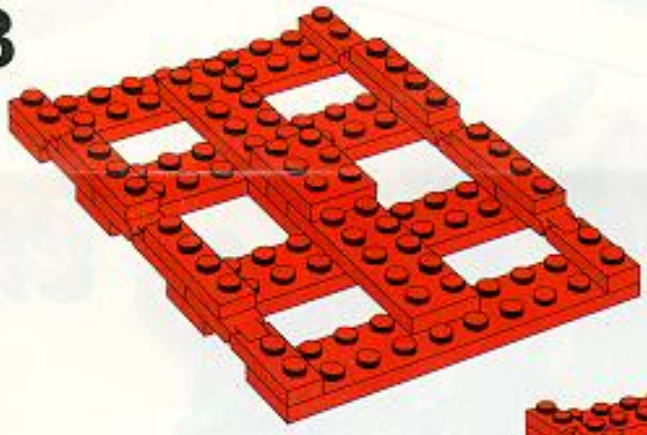

4

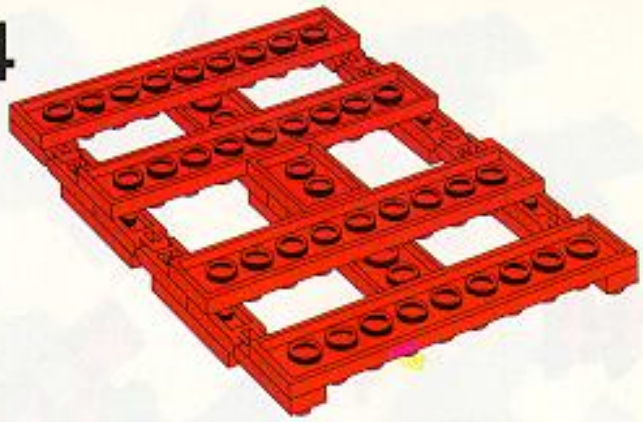

5

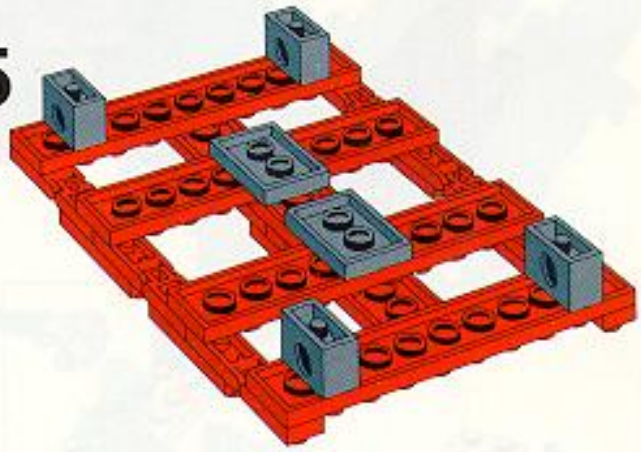

6

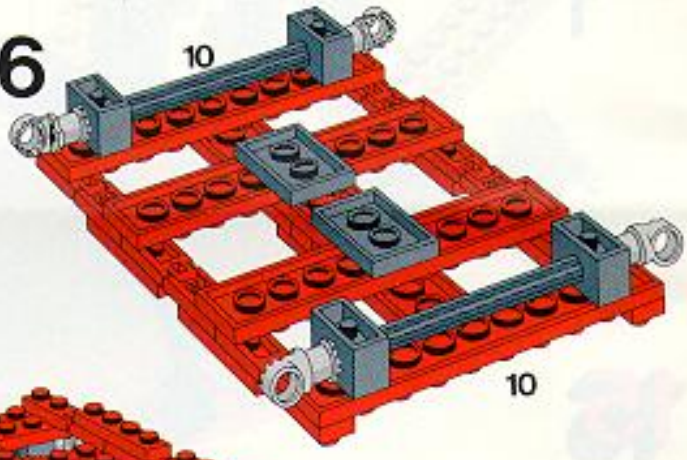

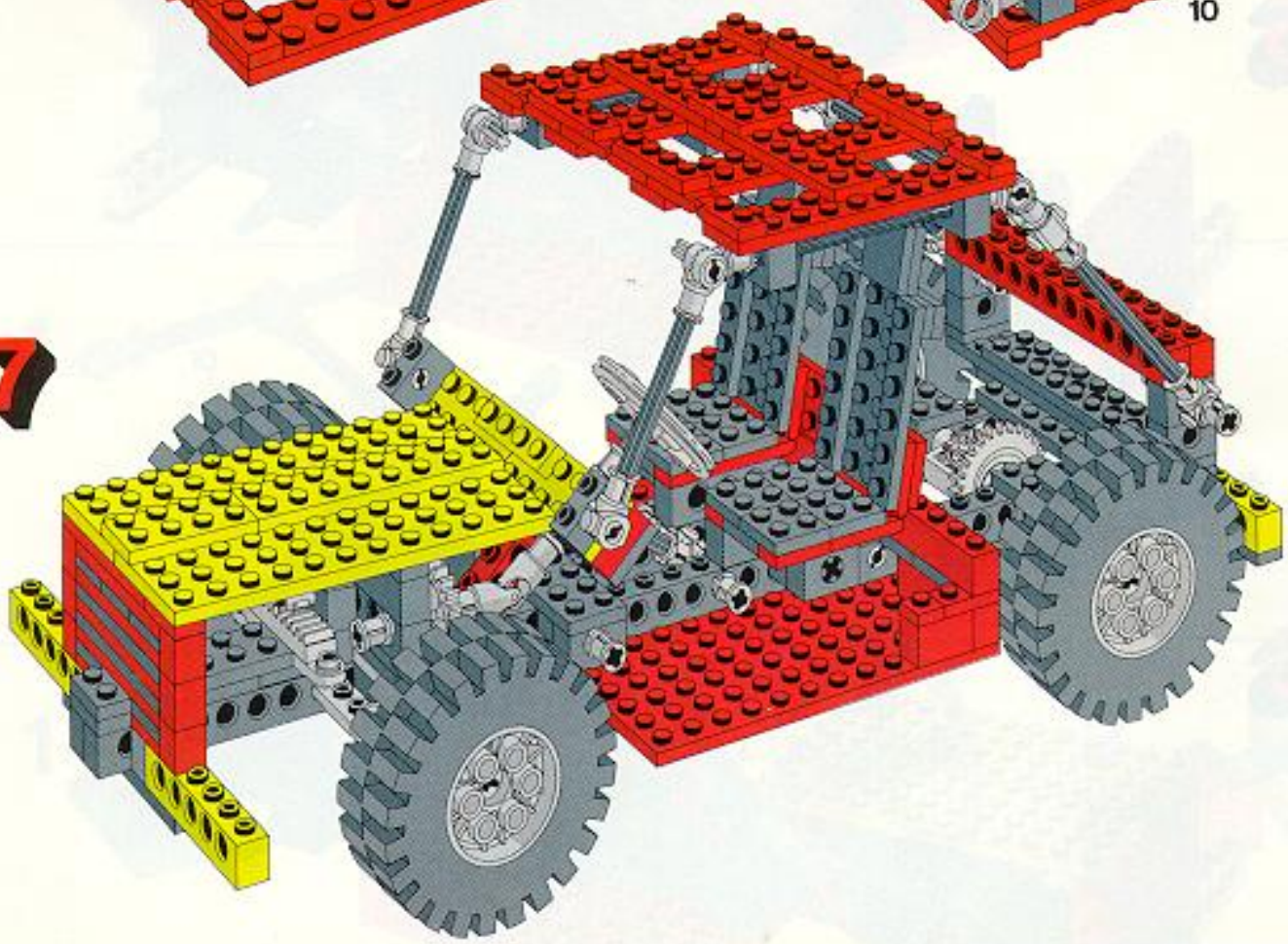

17

1

2

3

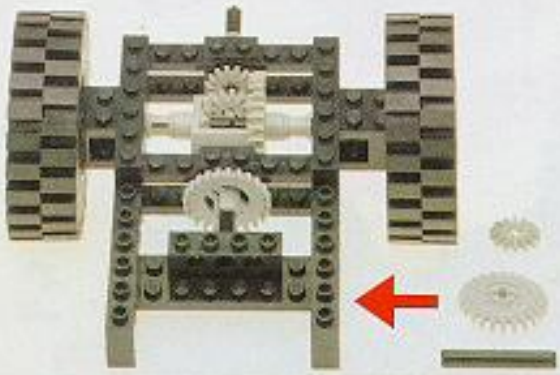

4

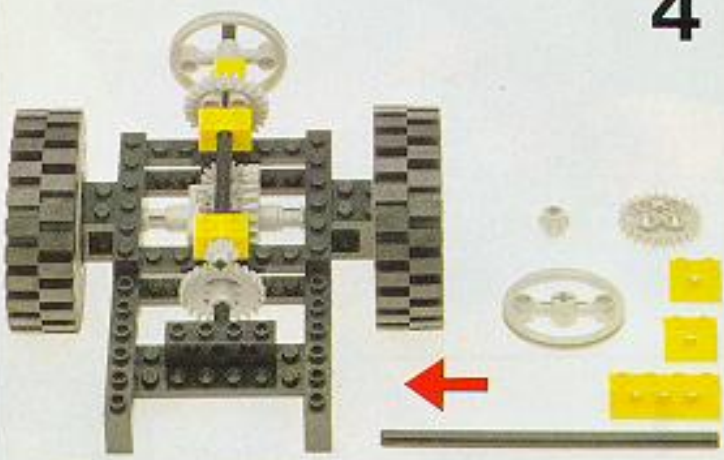

5

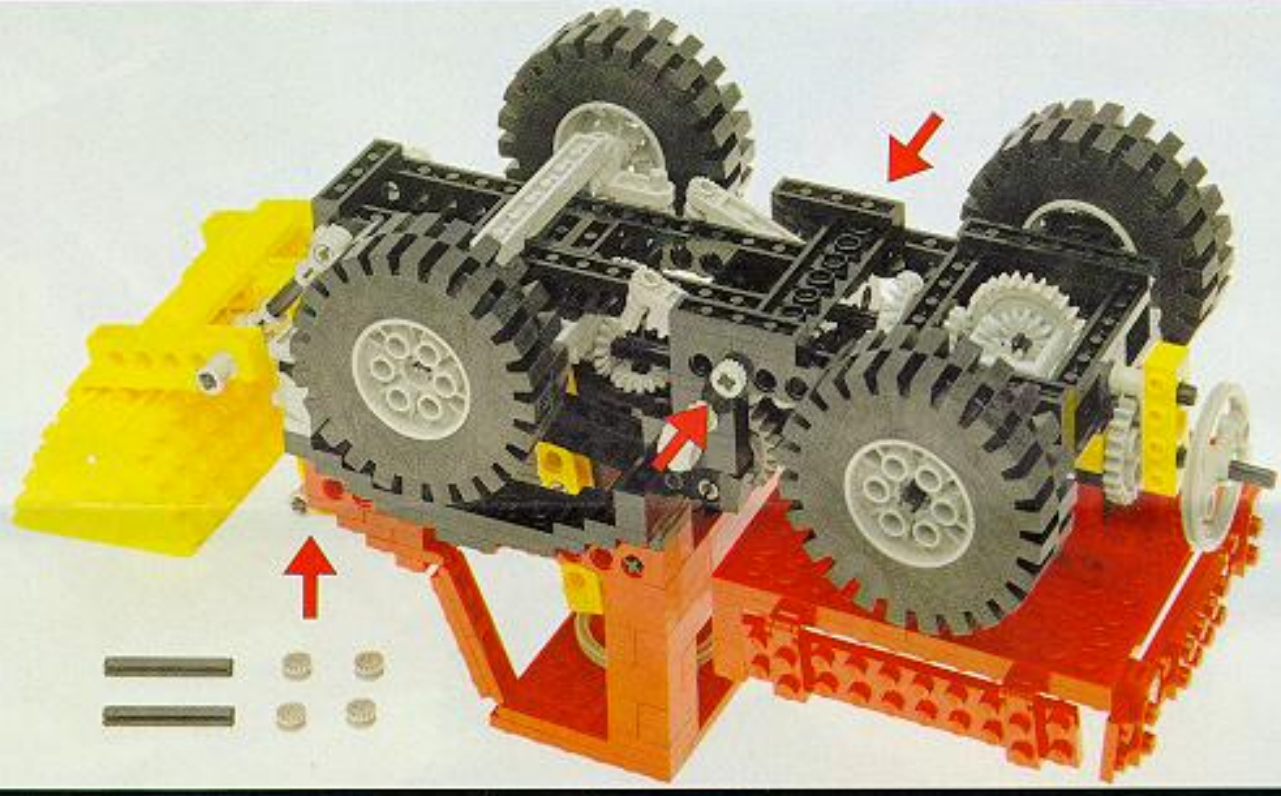

6

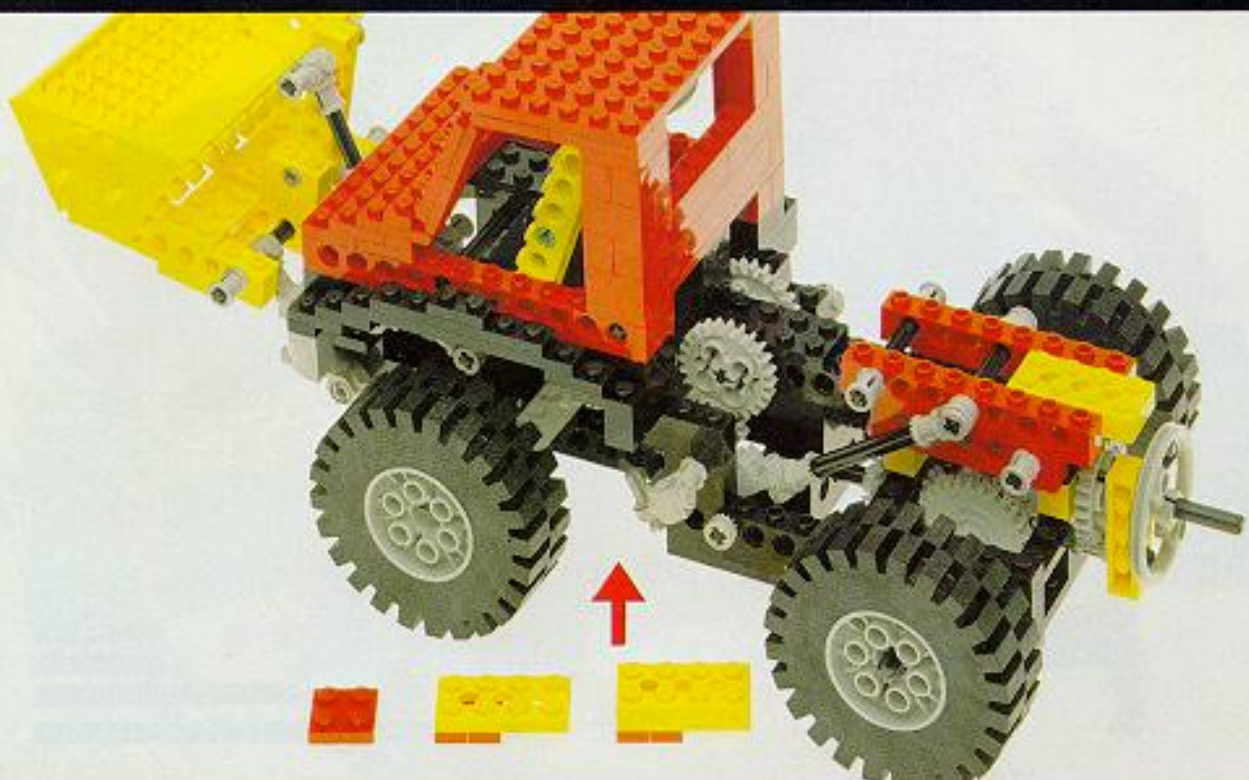

7

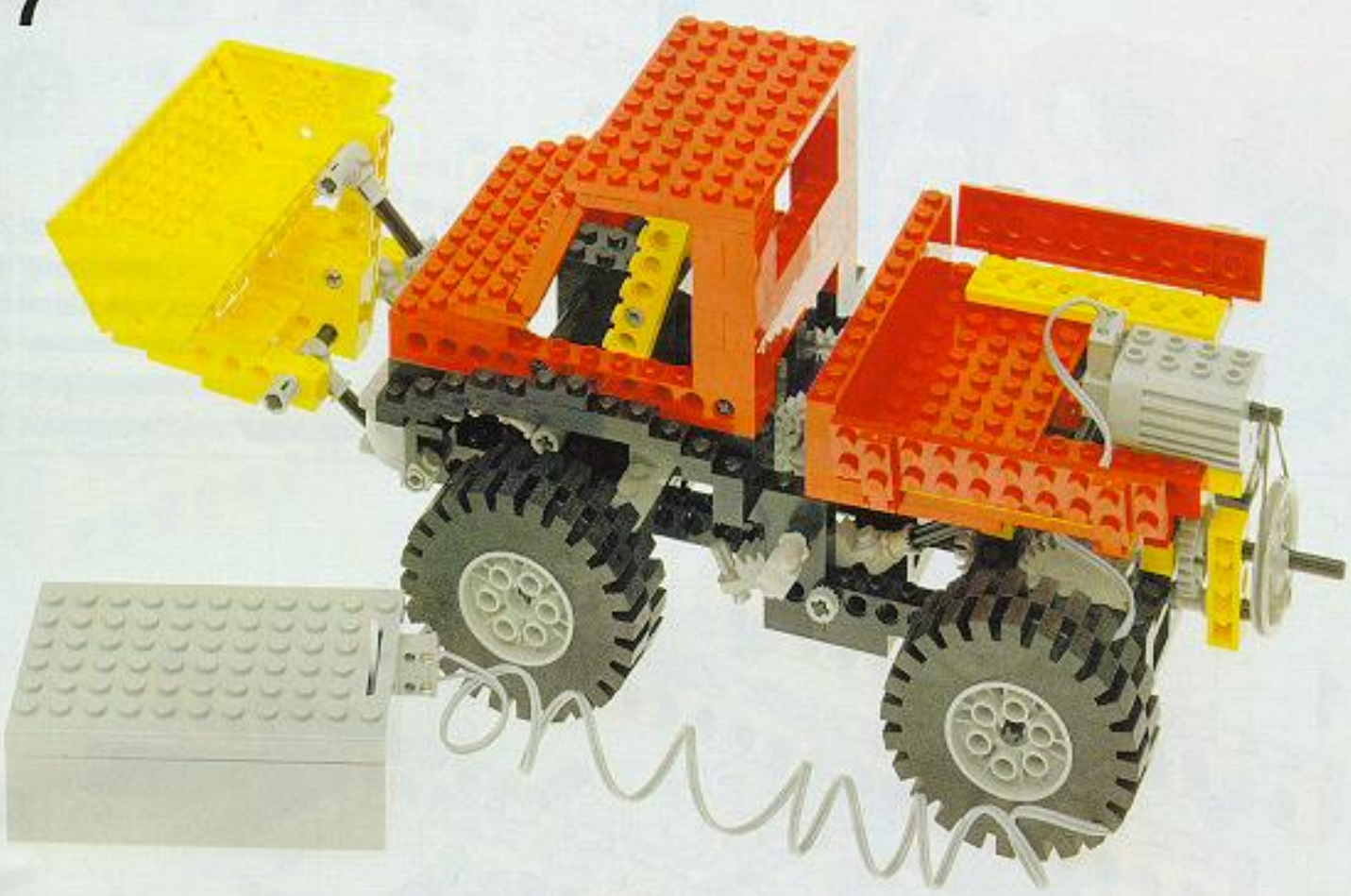

8

8848 + 8710

=

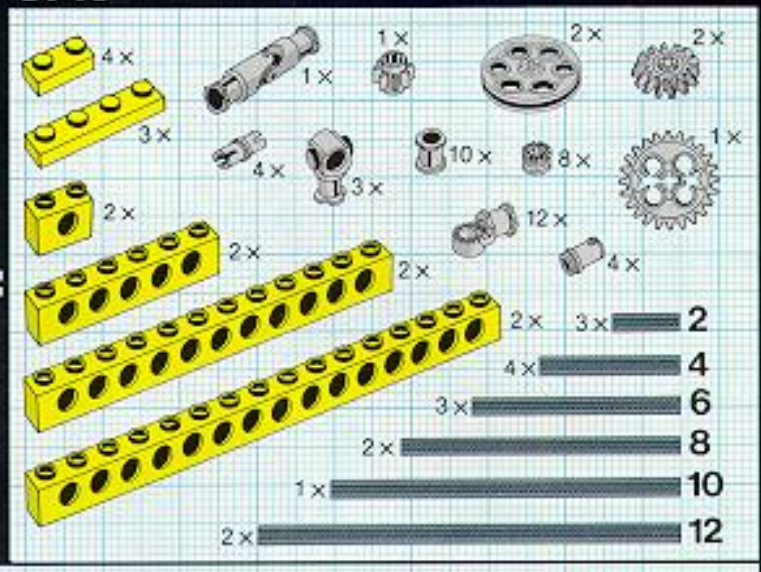

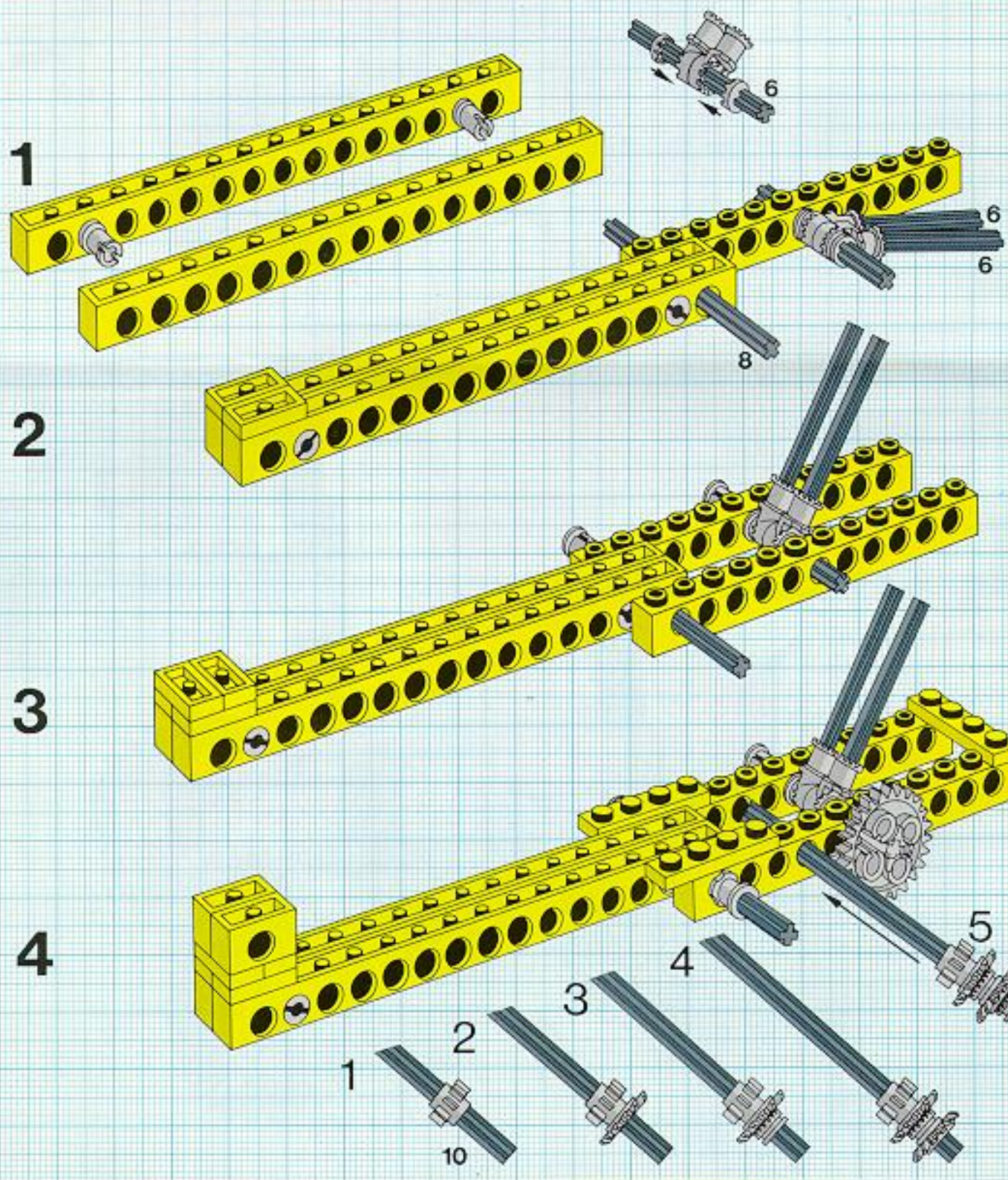

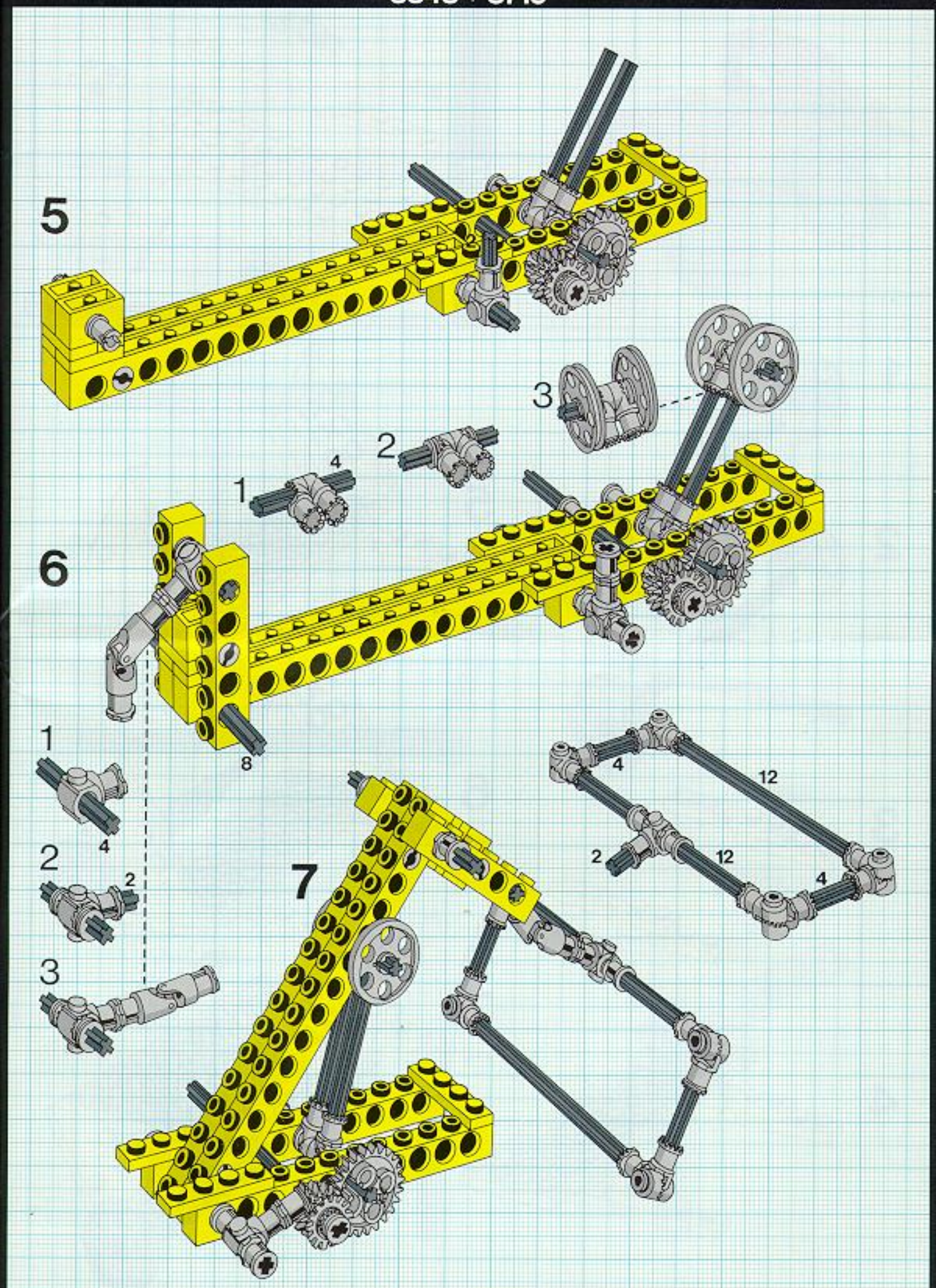
5
3
2
1
4
6
8
1
4
2
2
3
7
4
12
2
12
4

8848 + 8710

=

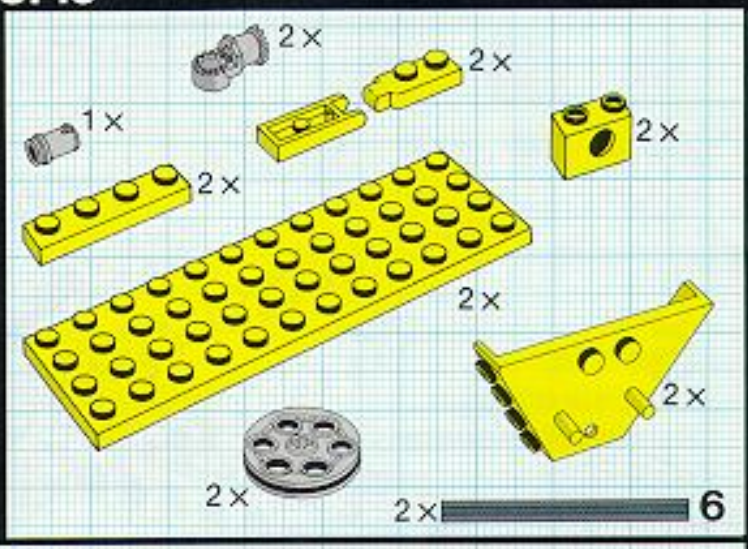

1

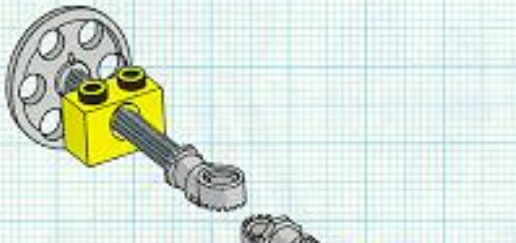

2

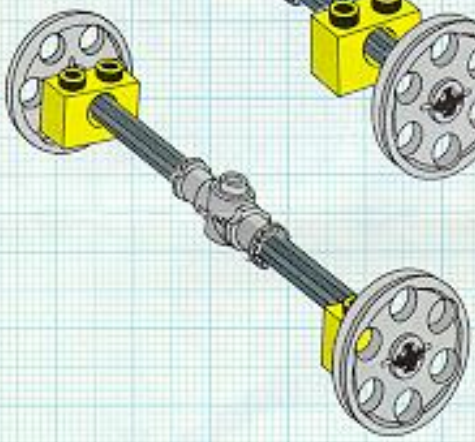

3

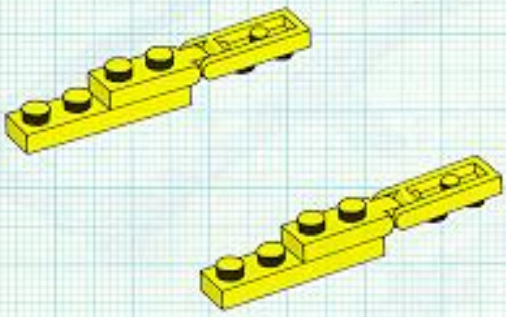

4

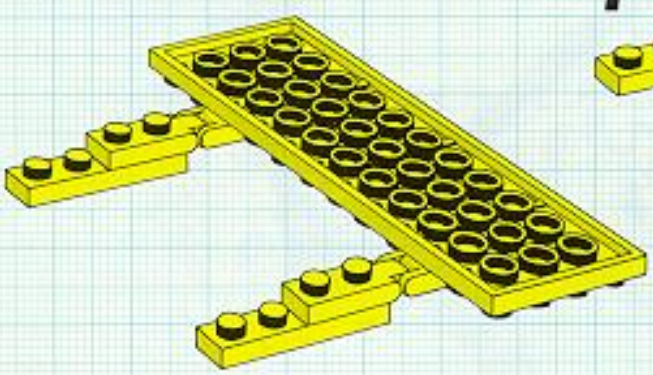

5

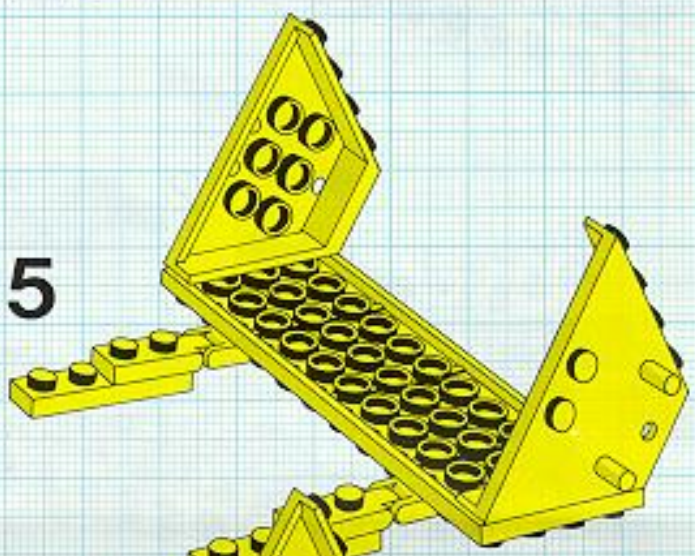

6

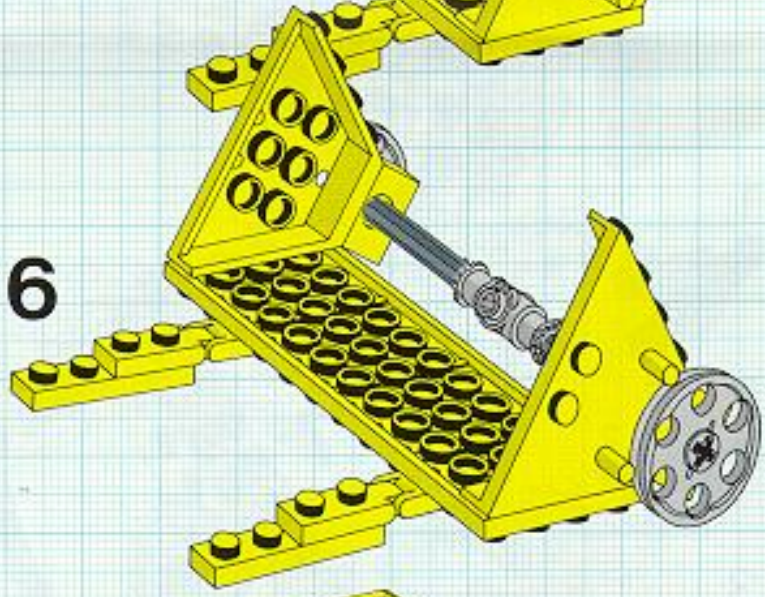

7

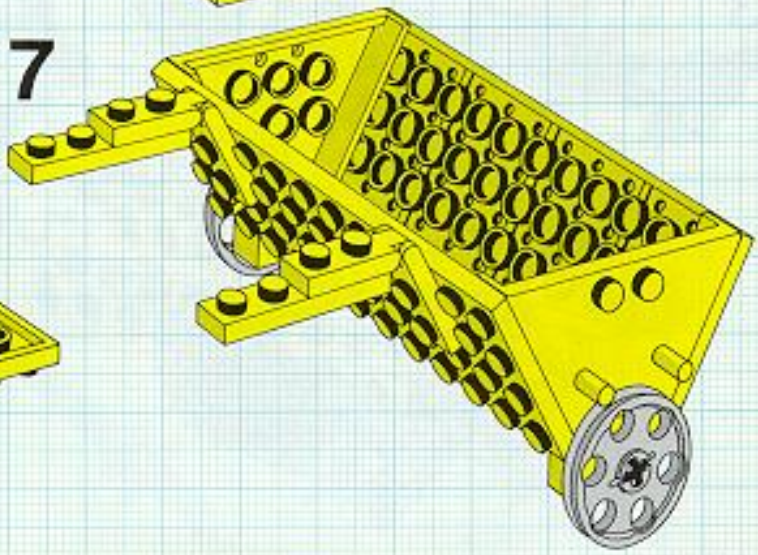

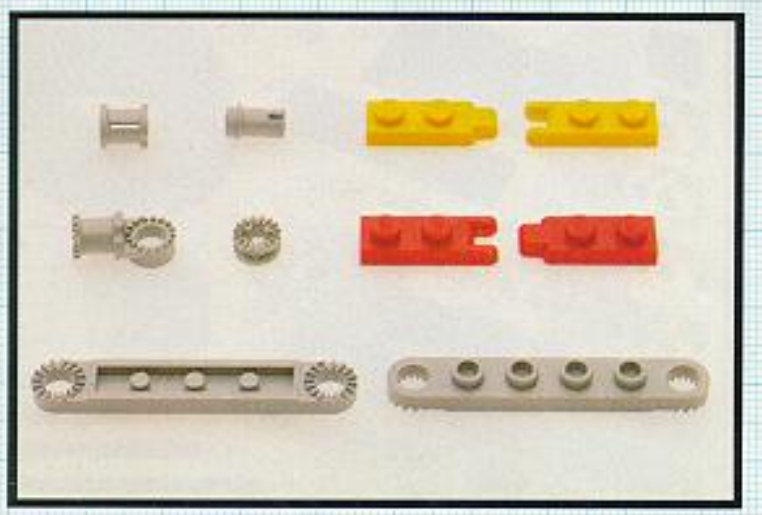

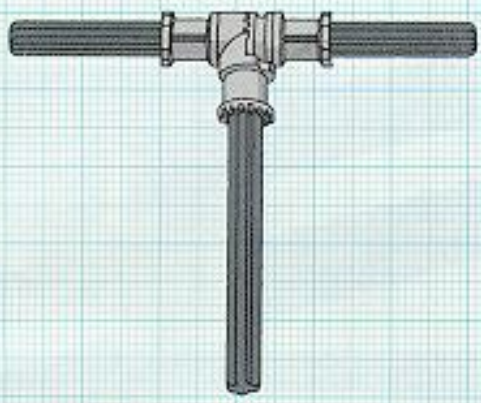

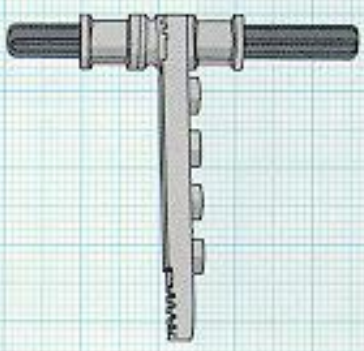

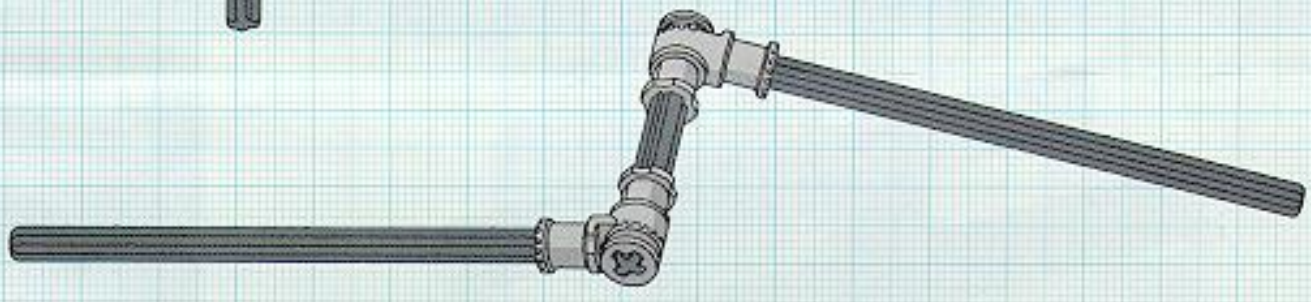

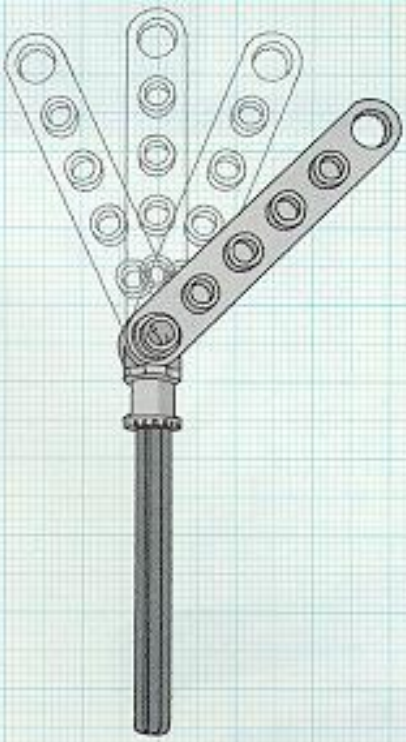

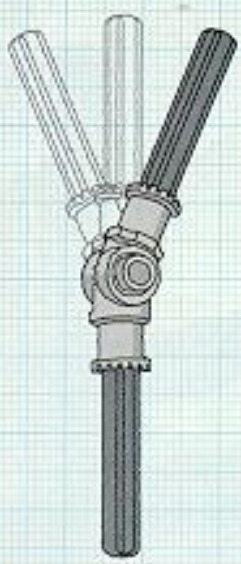

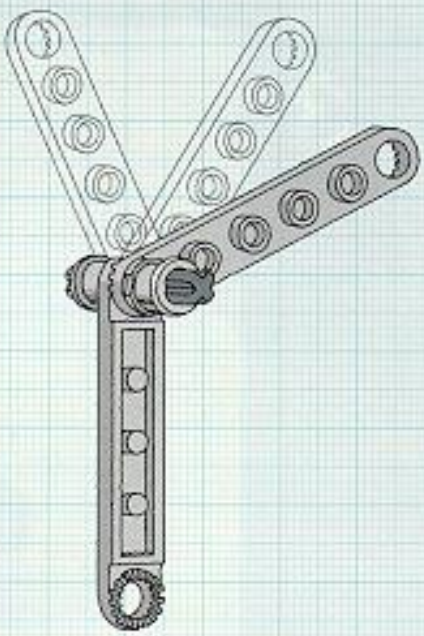

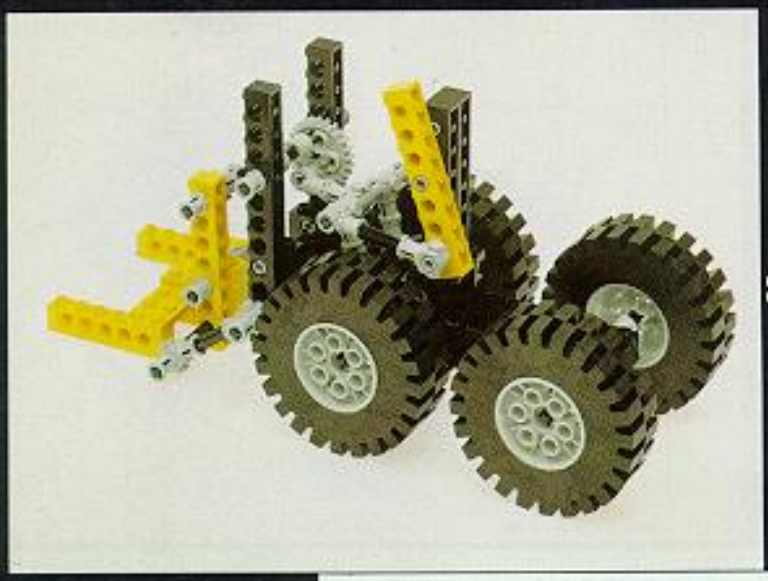

=

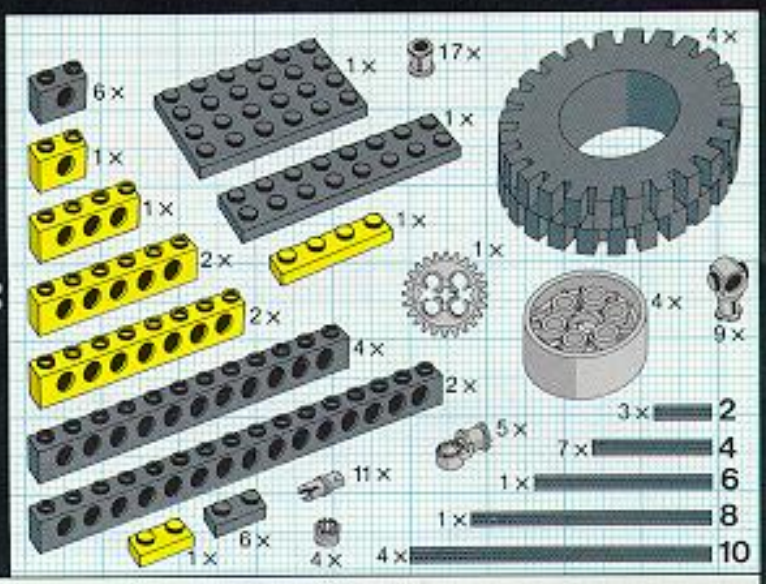

1

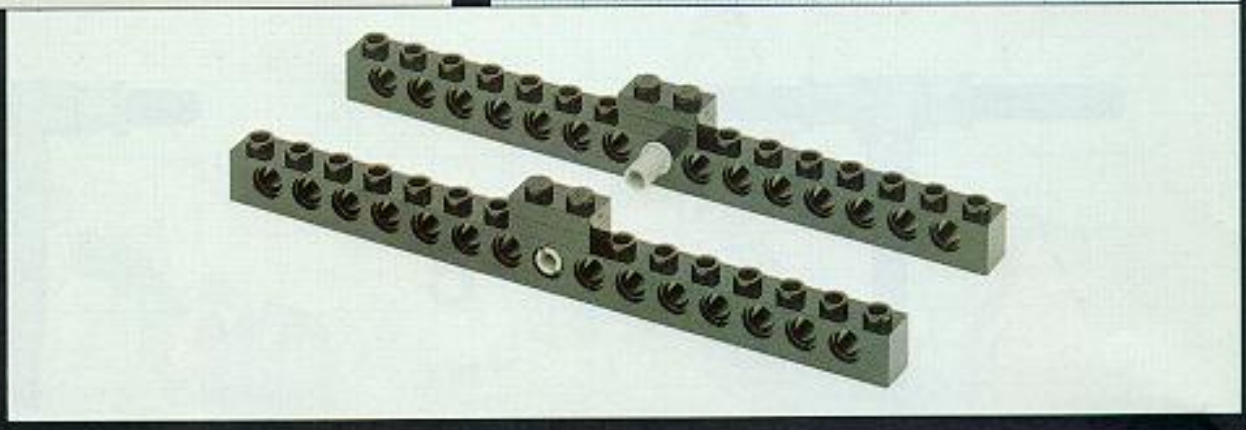

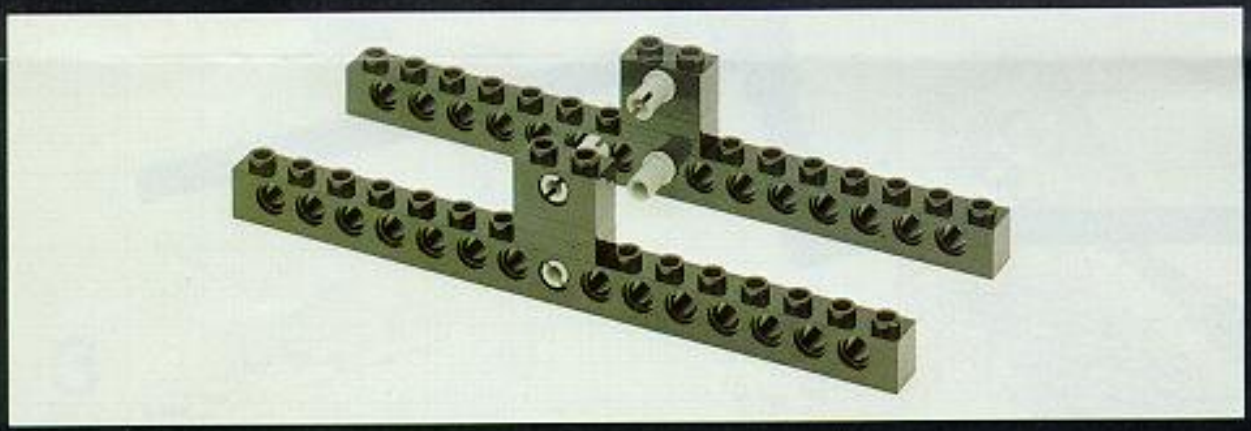

2

3

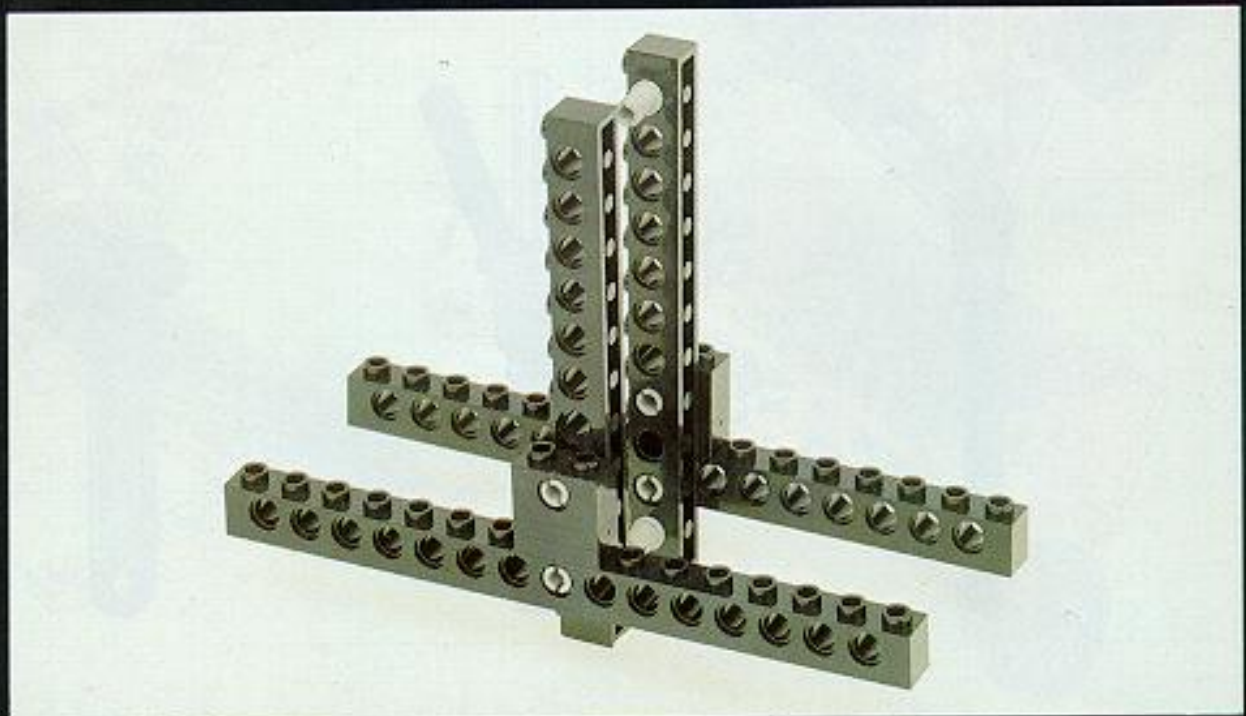

4

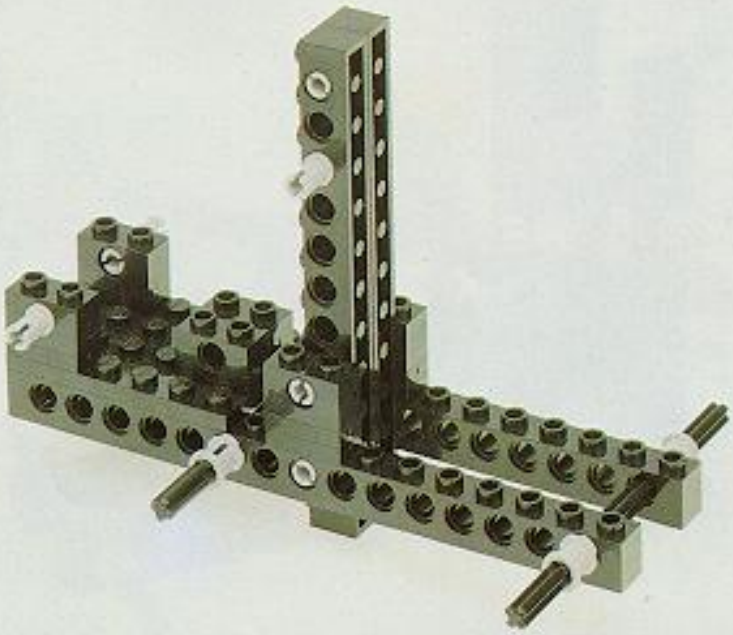

5

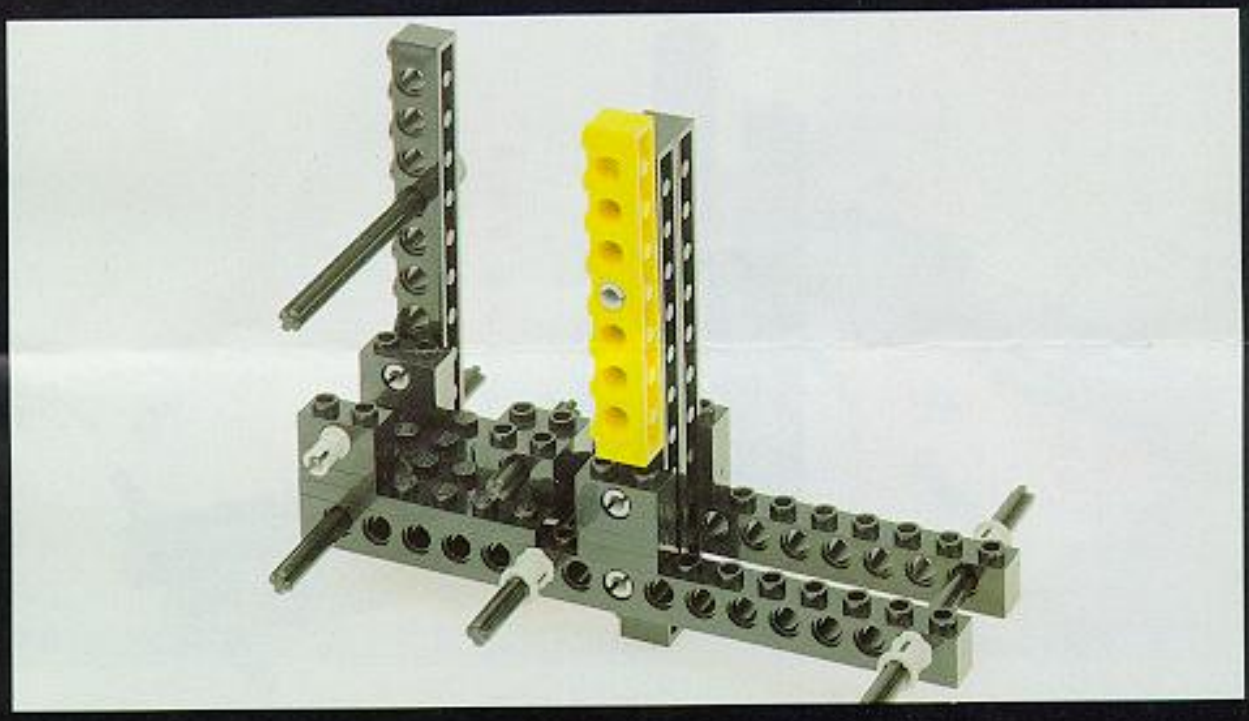

6

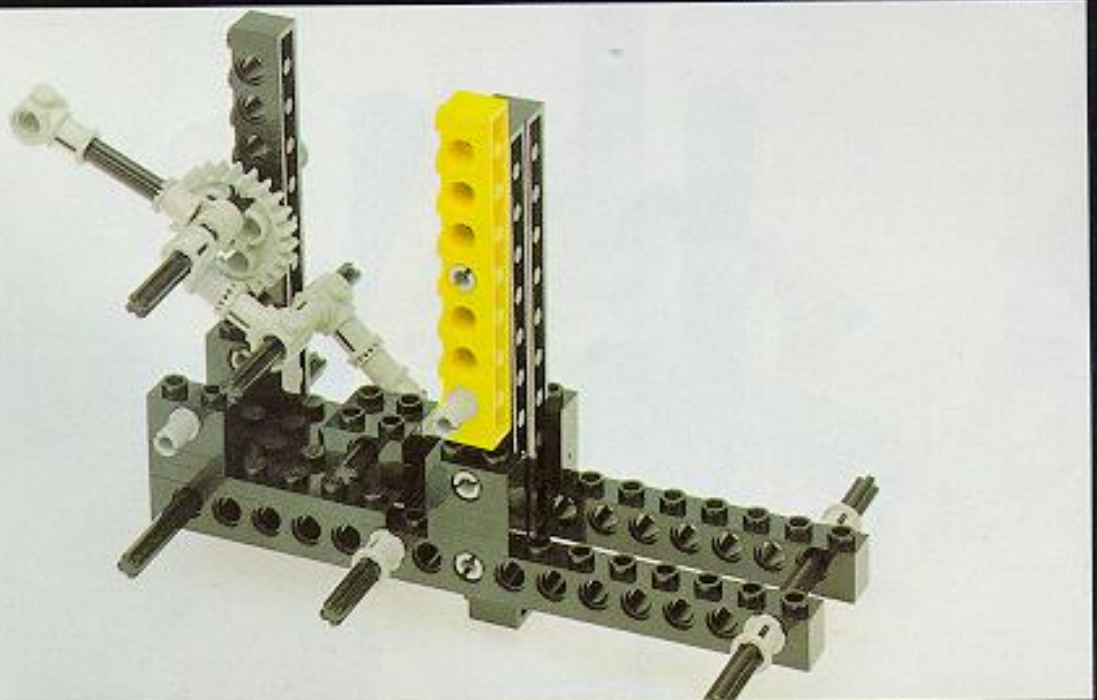

7

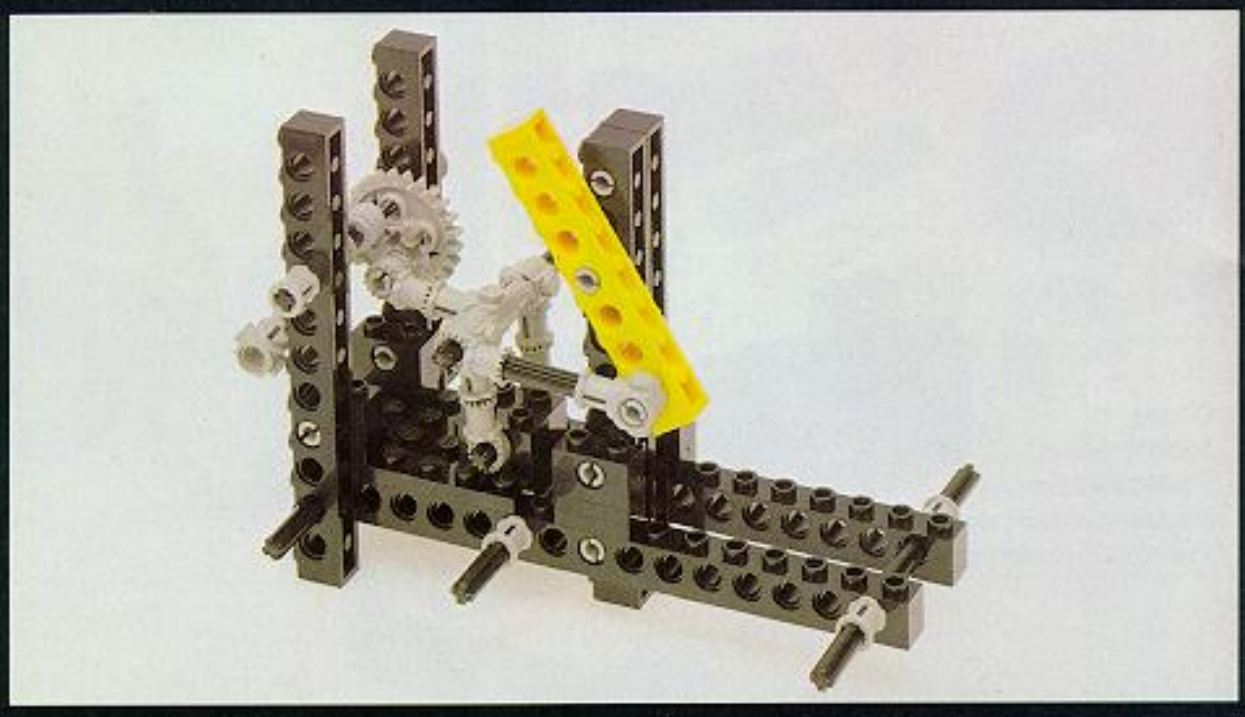

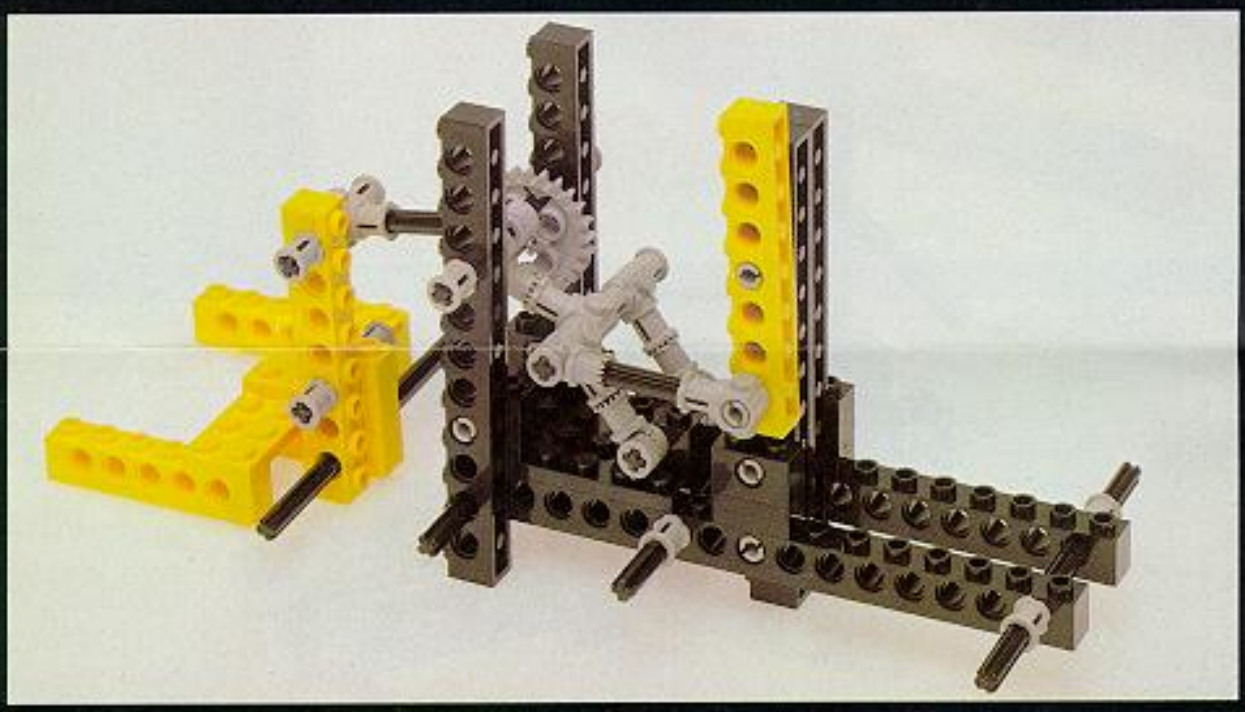

8

9

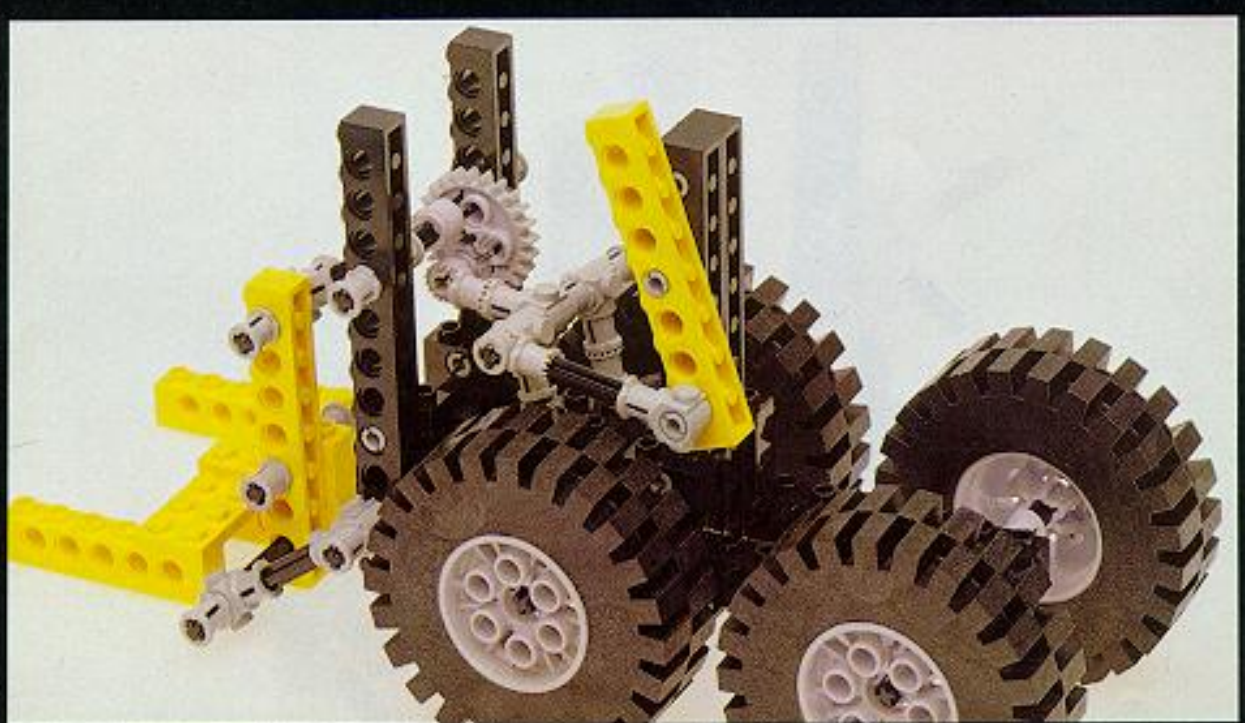

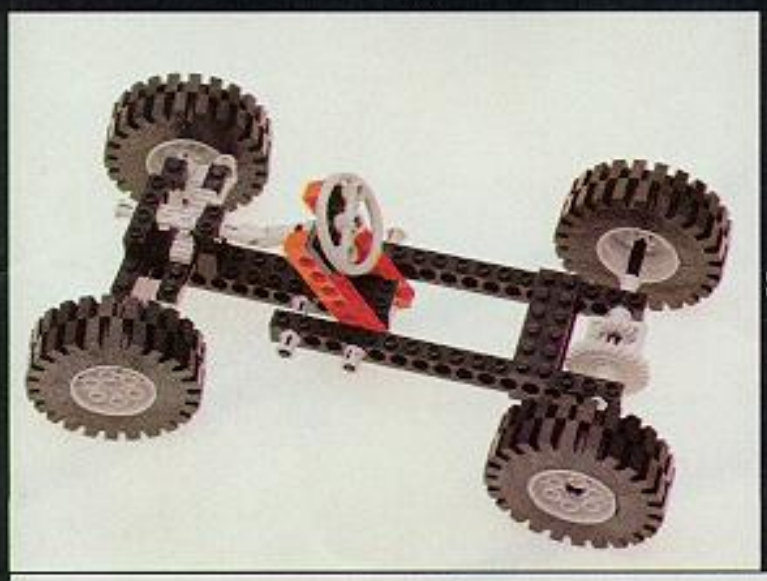

=

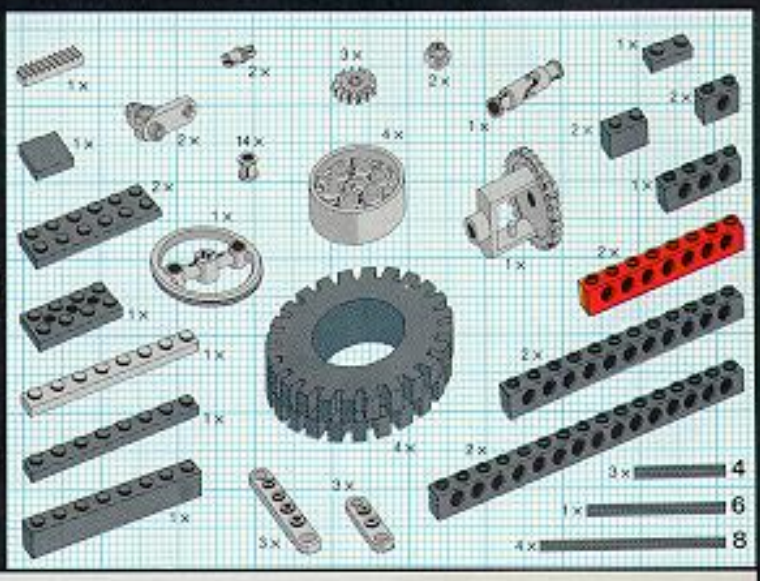

1

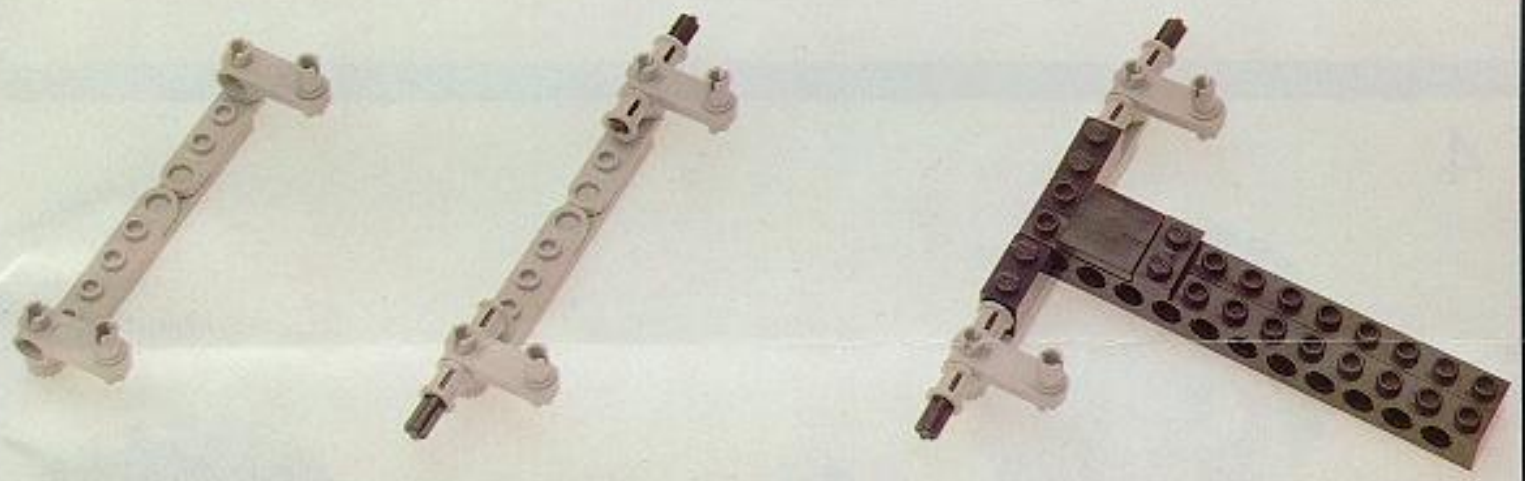

2

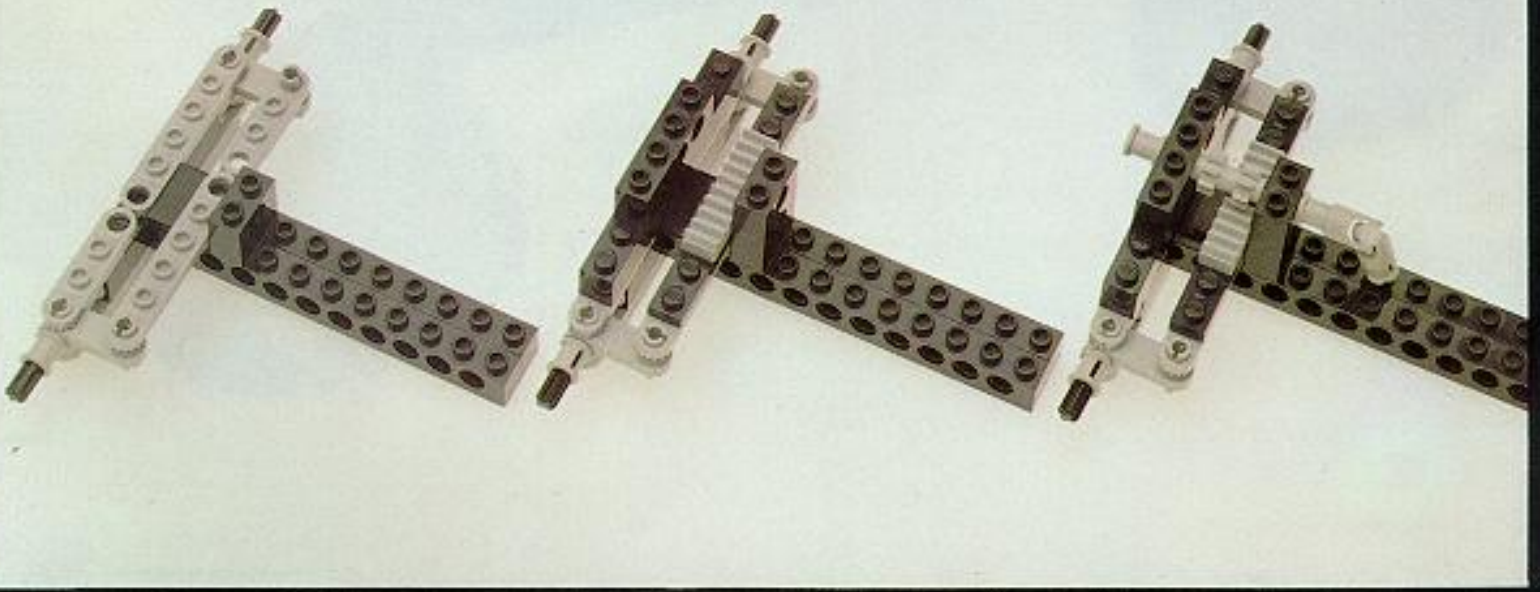

3

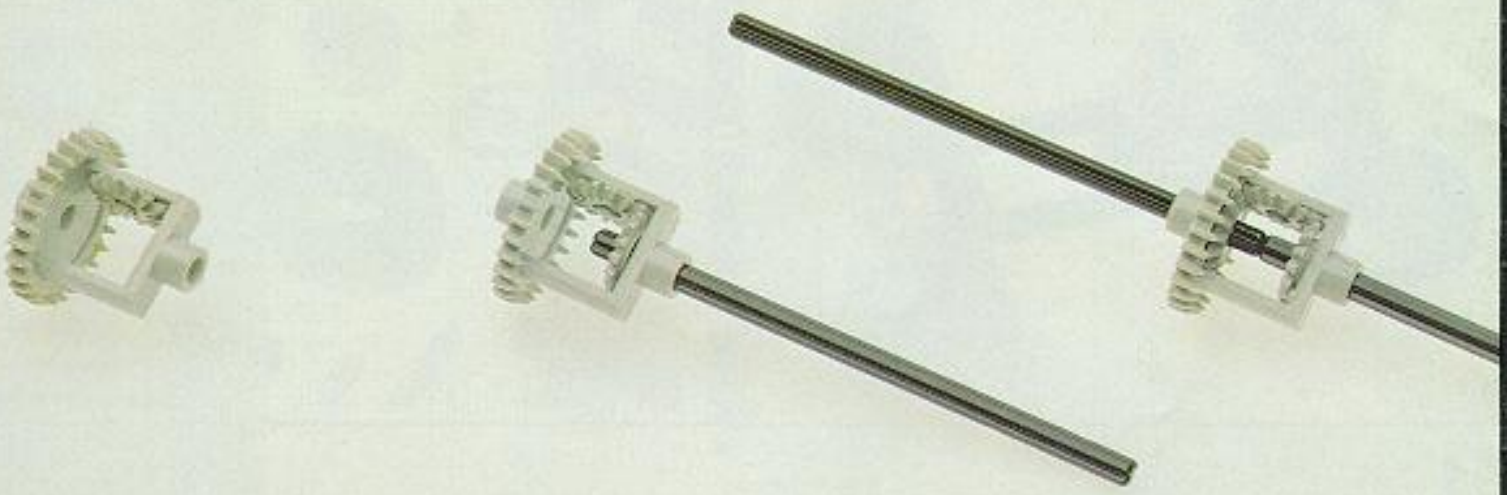

4

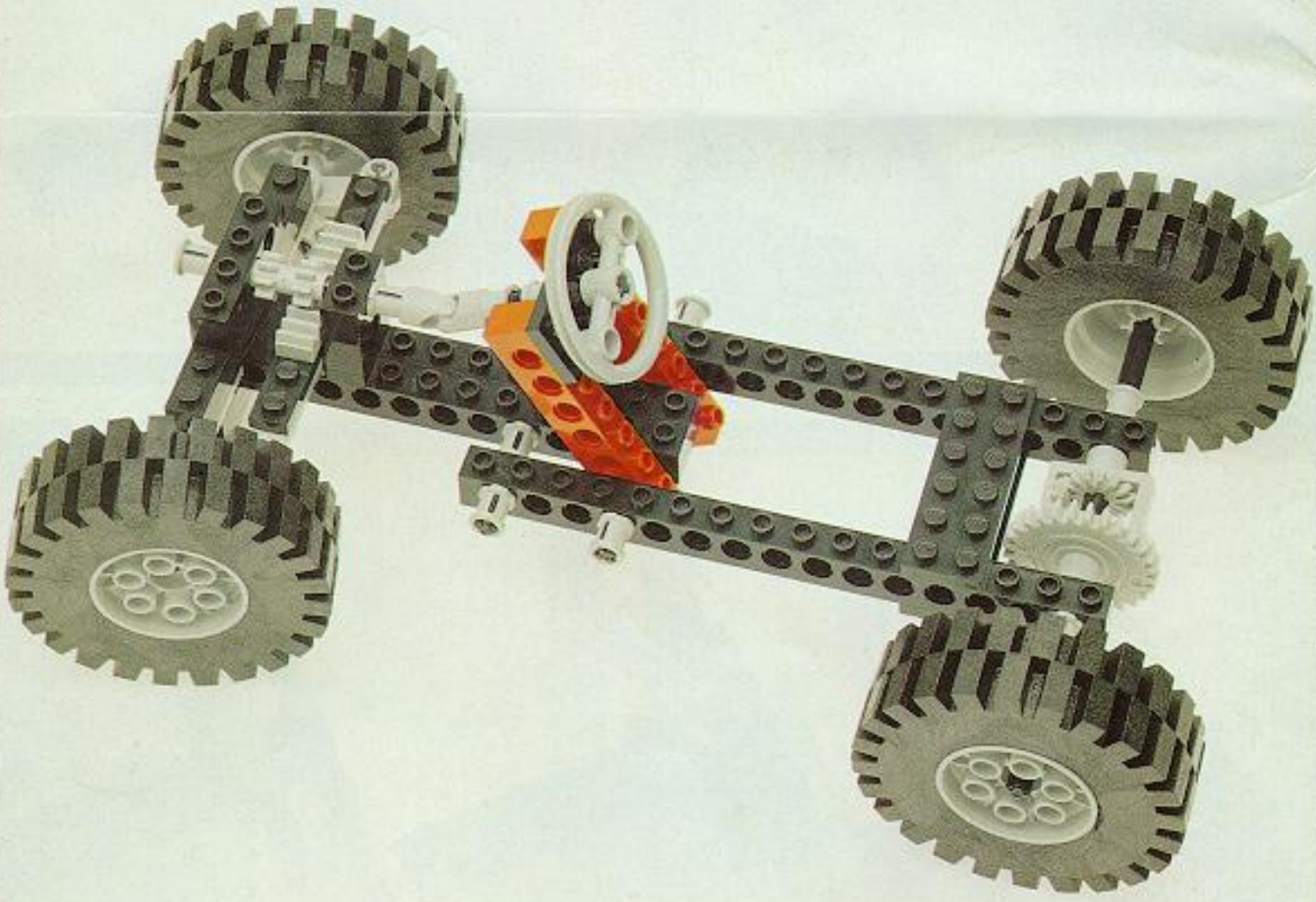

Printed in Germany by Mühlmeister & Jöhnk, Hamburg