LEGO SYSTEM

4547

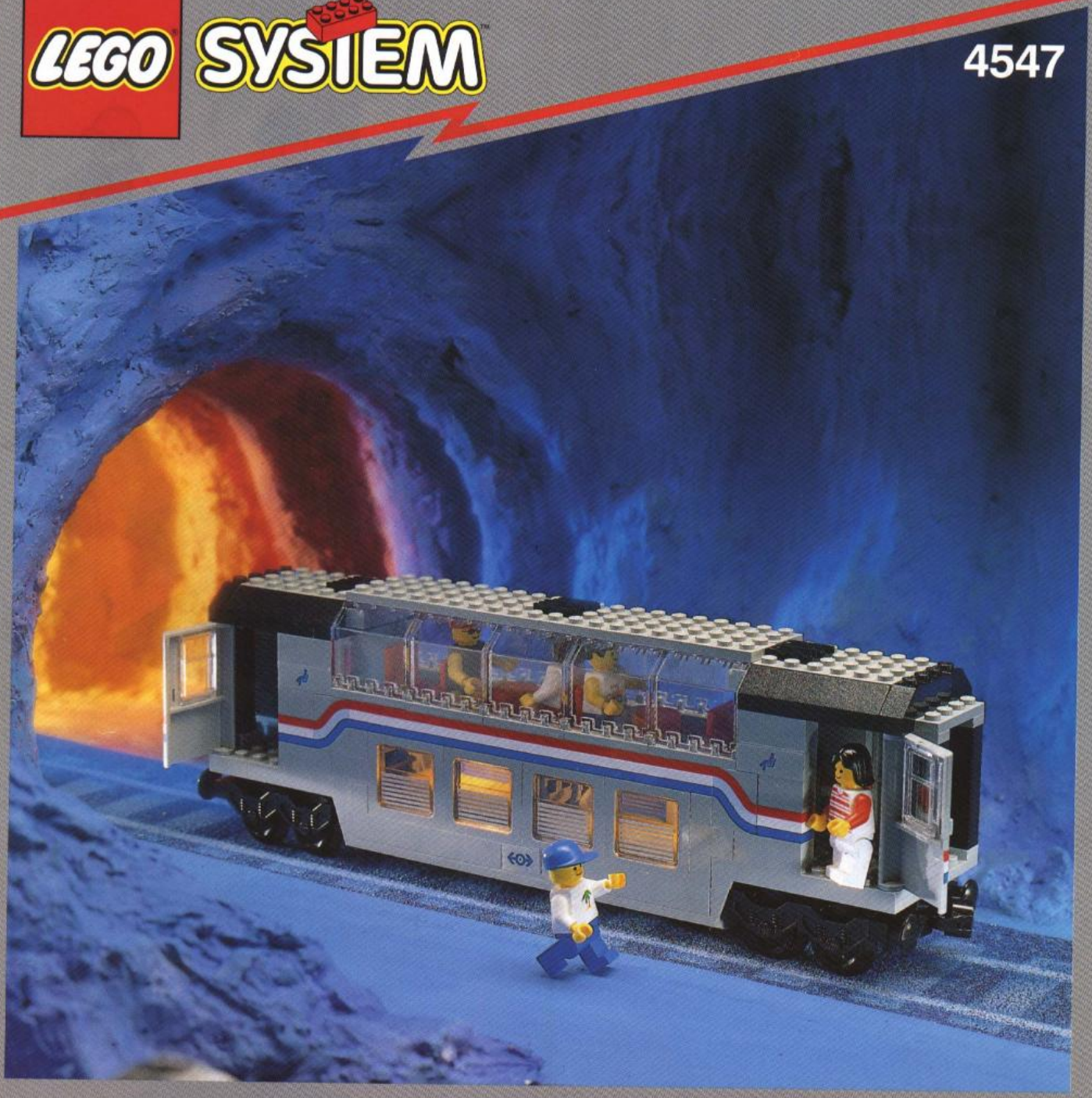

120519

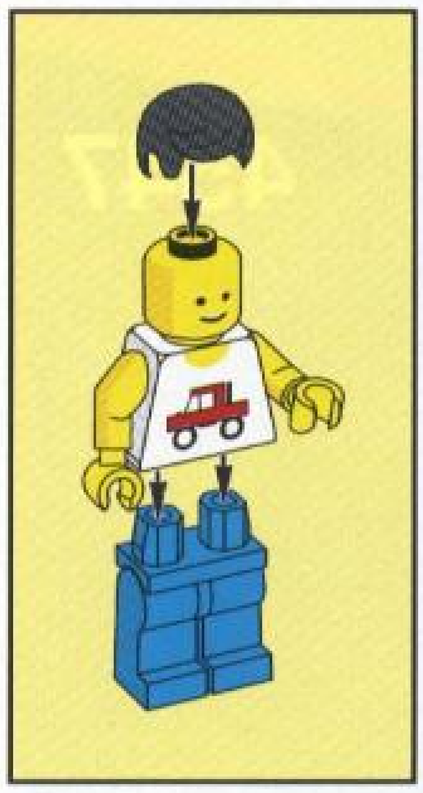

1

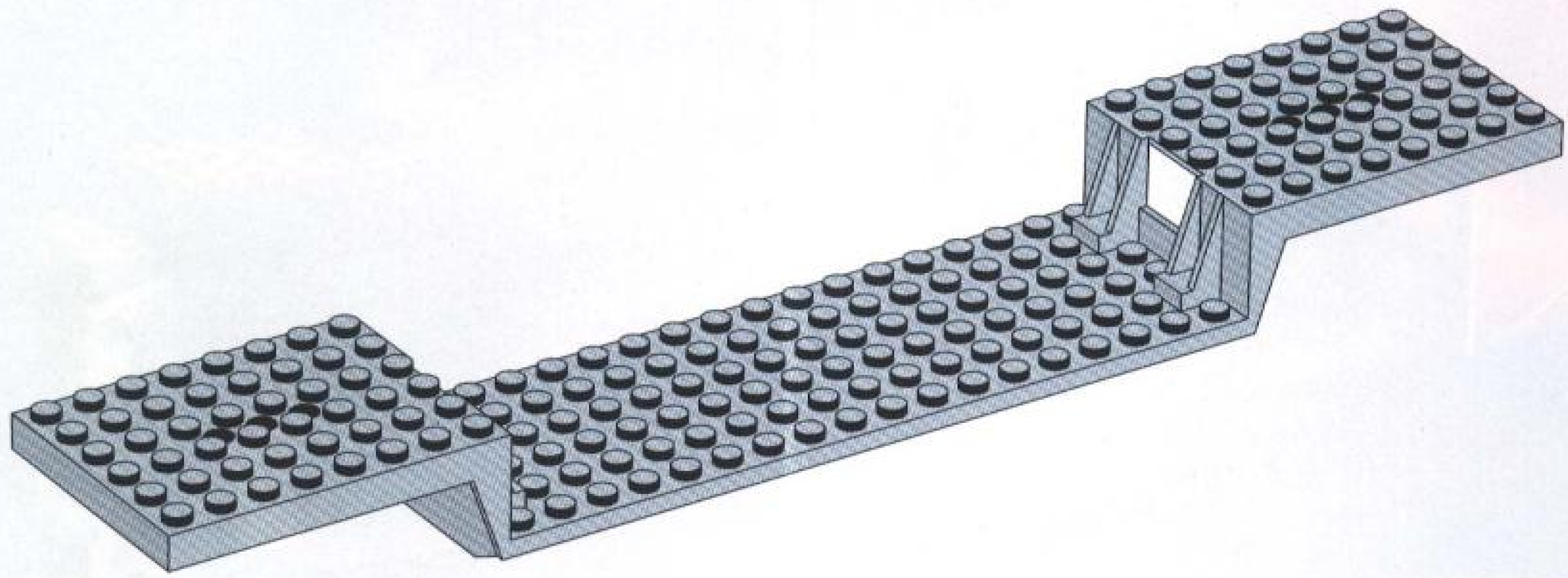

2

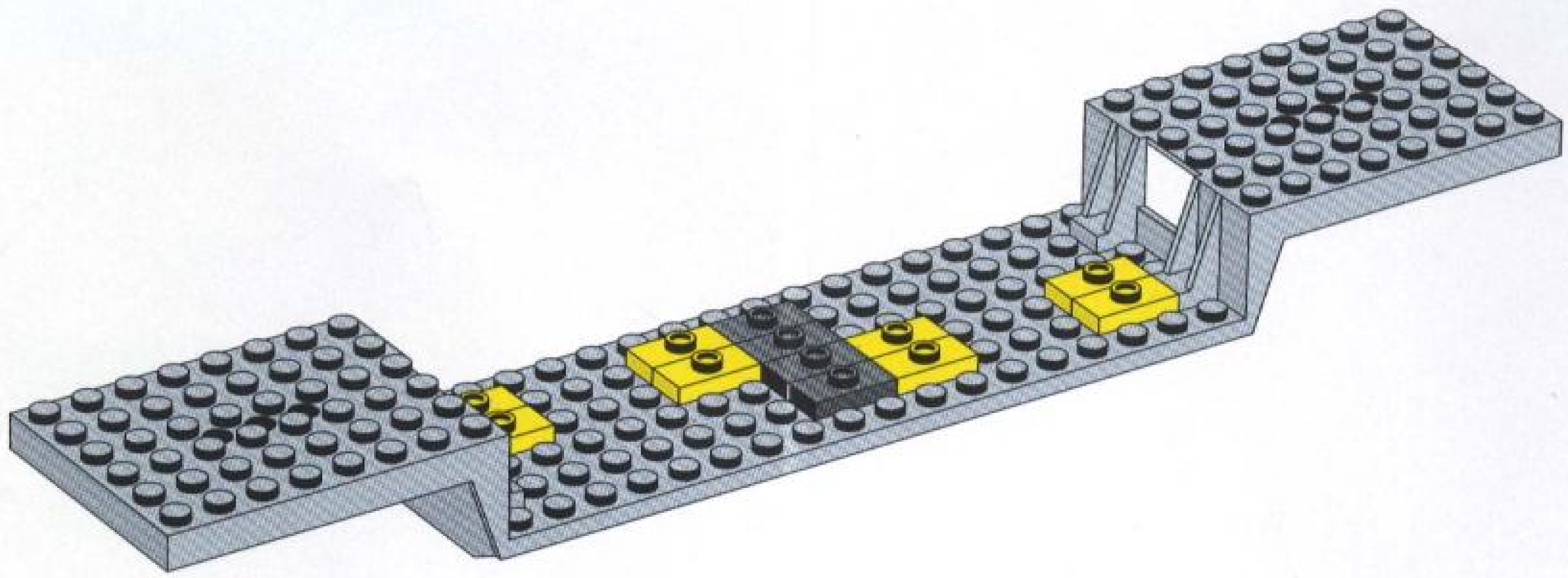

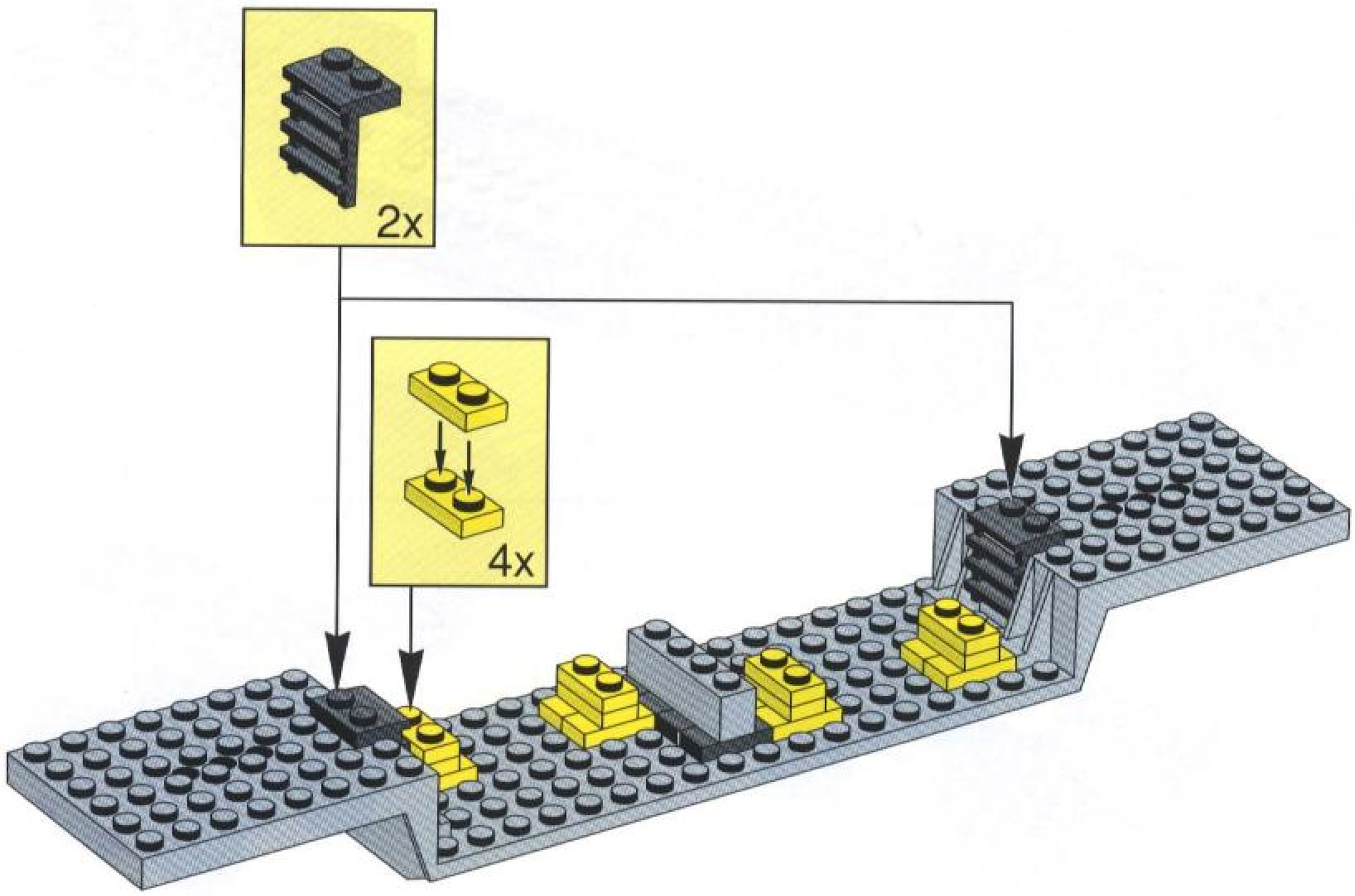

3

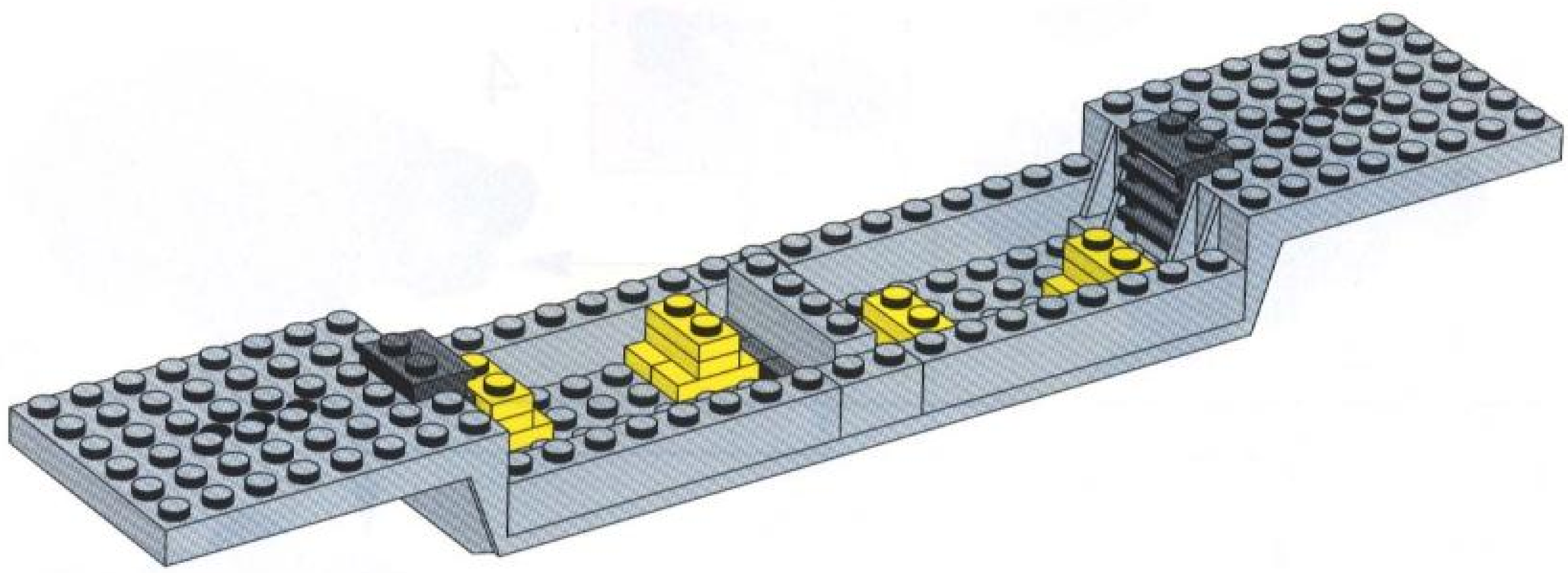

4

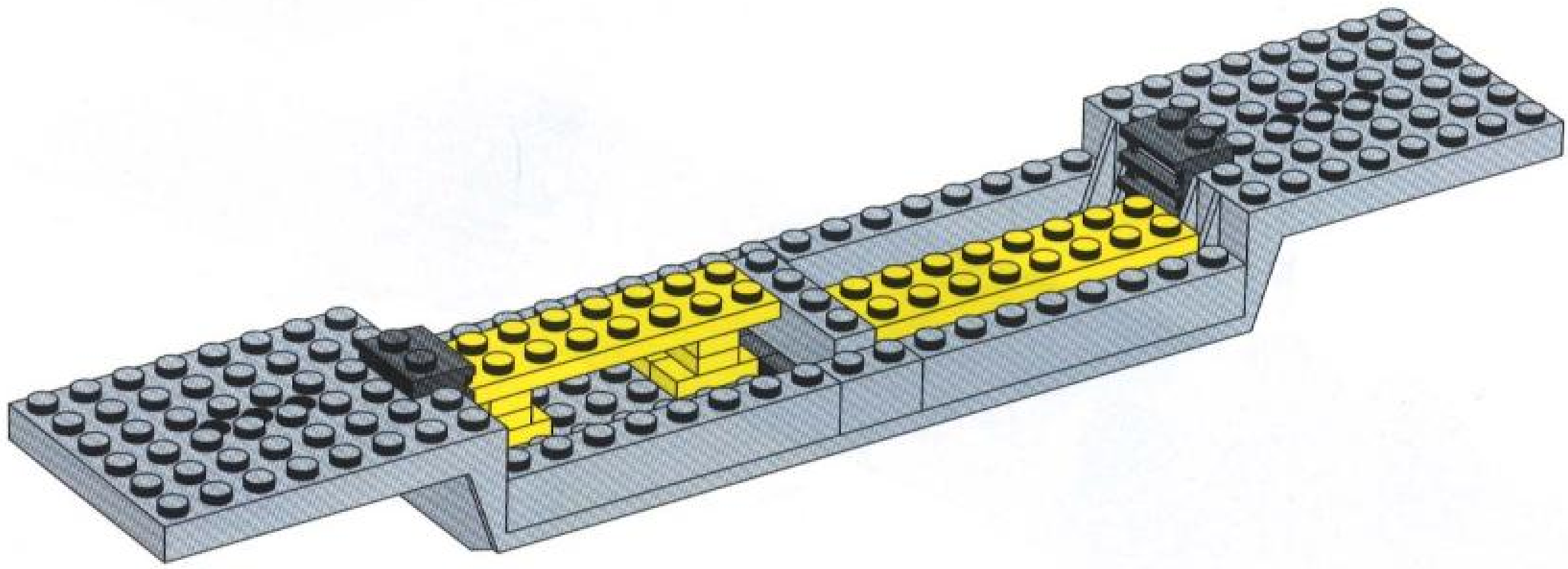

5

6

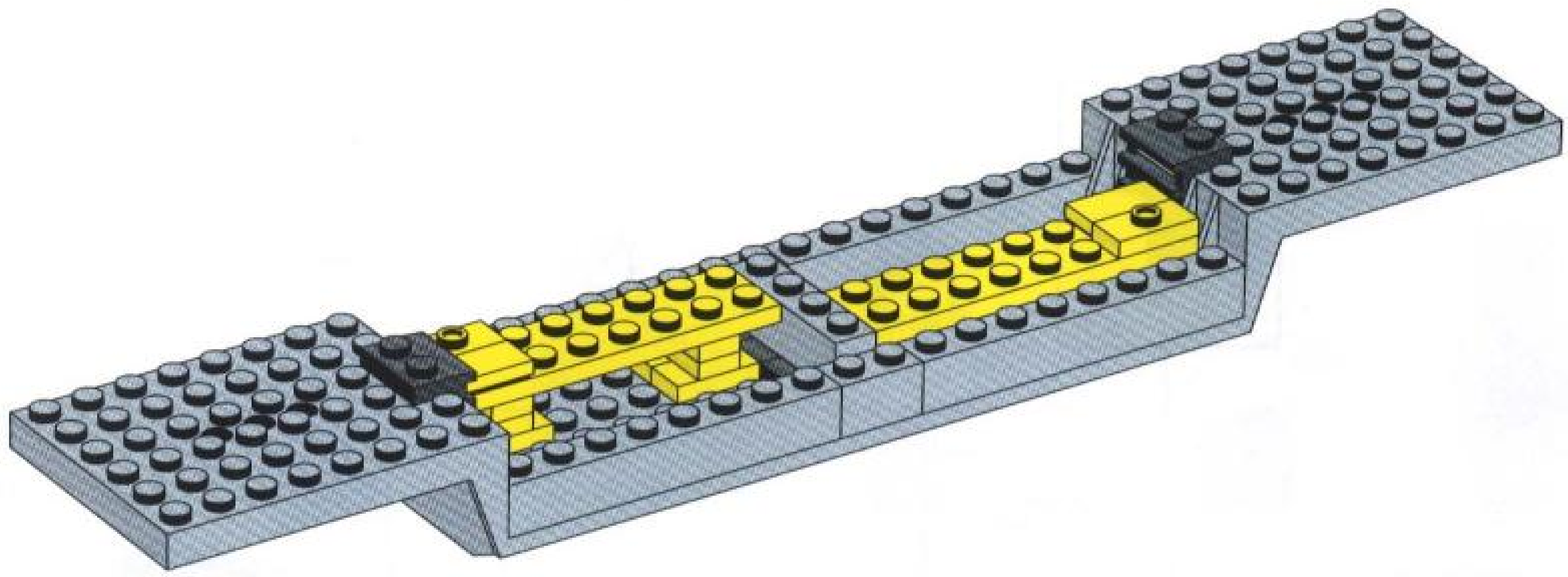

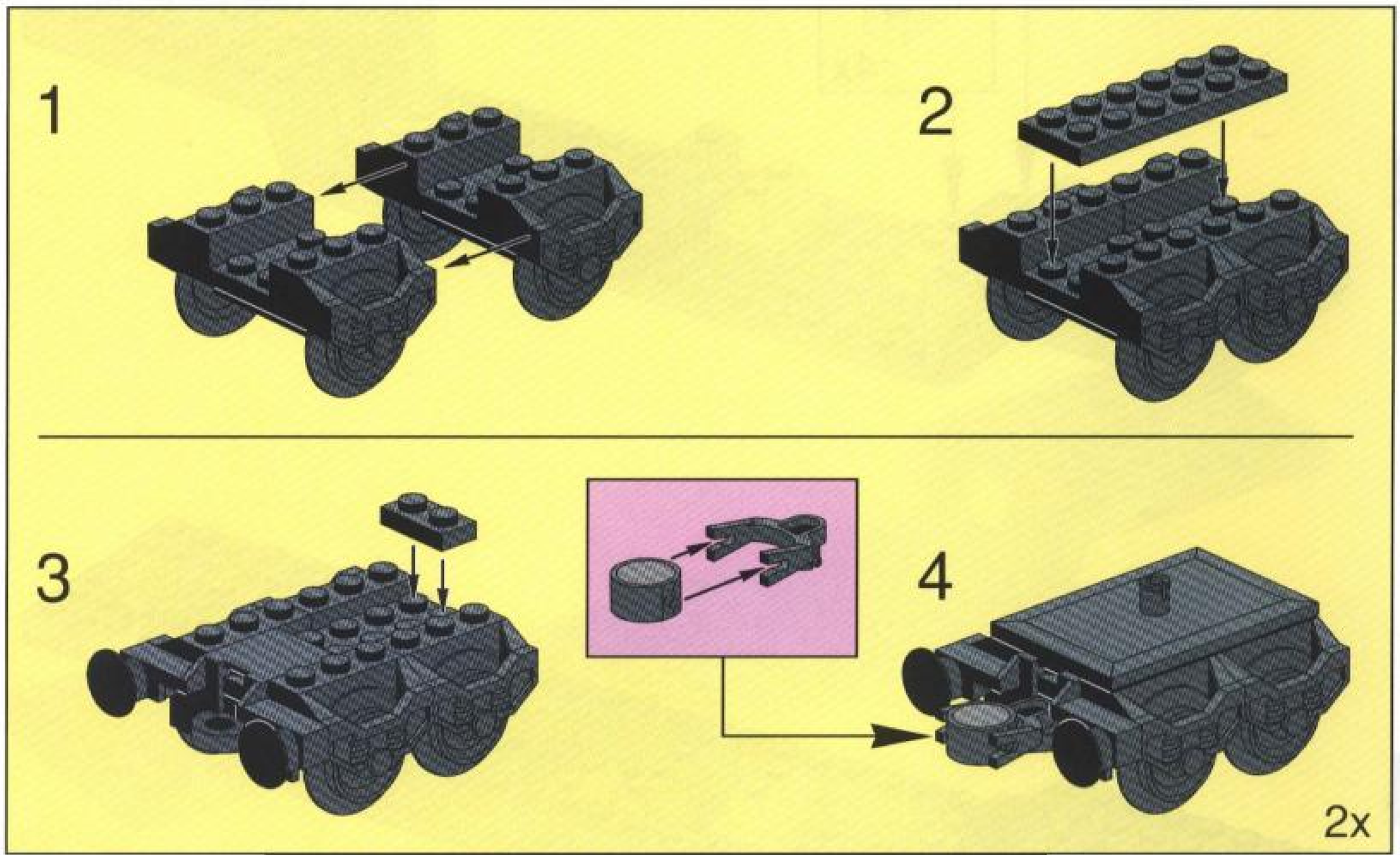

7

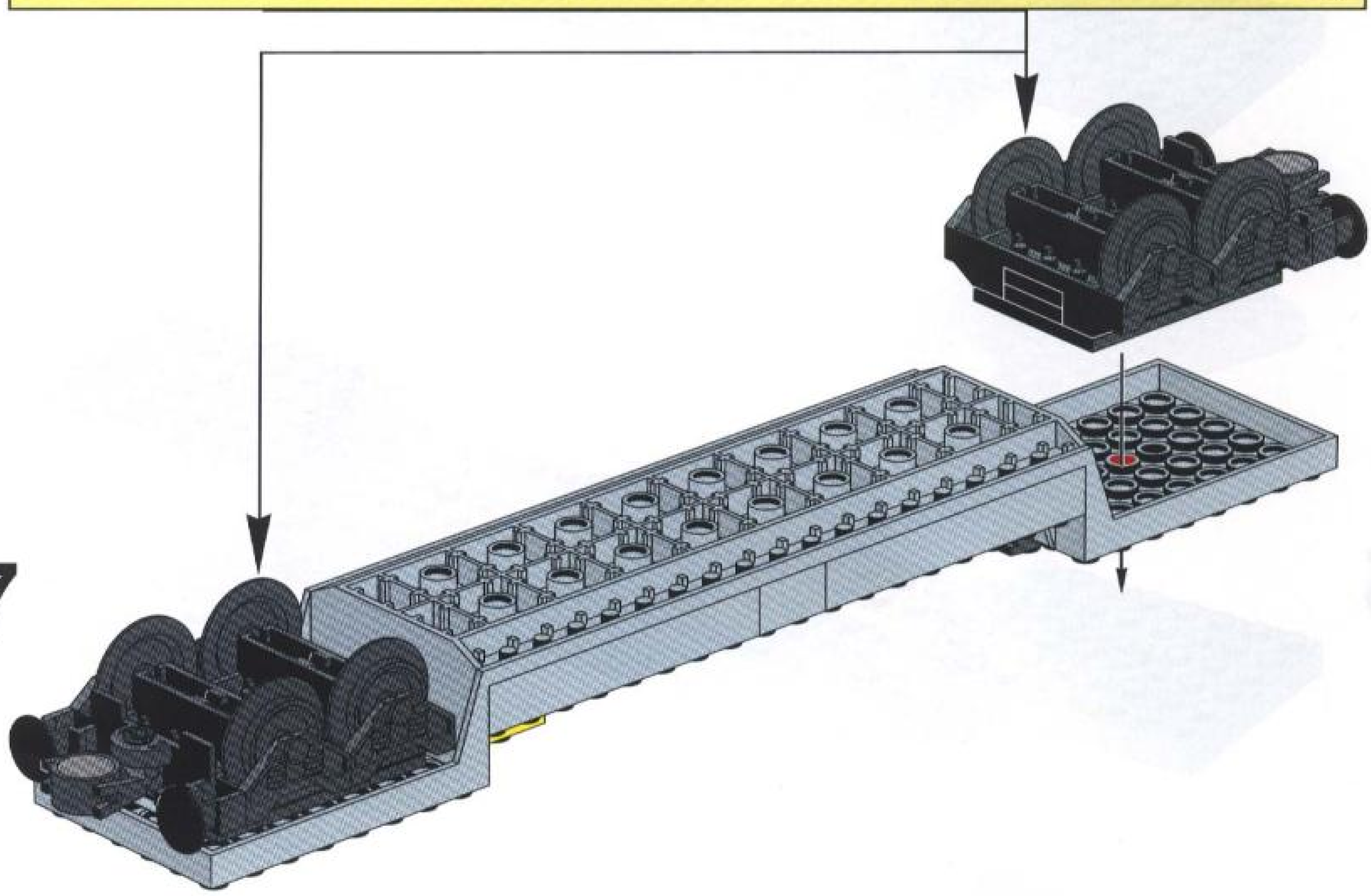

8

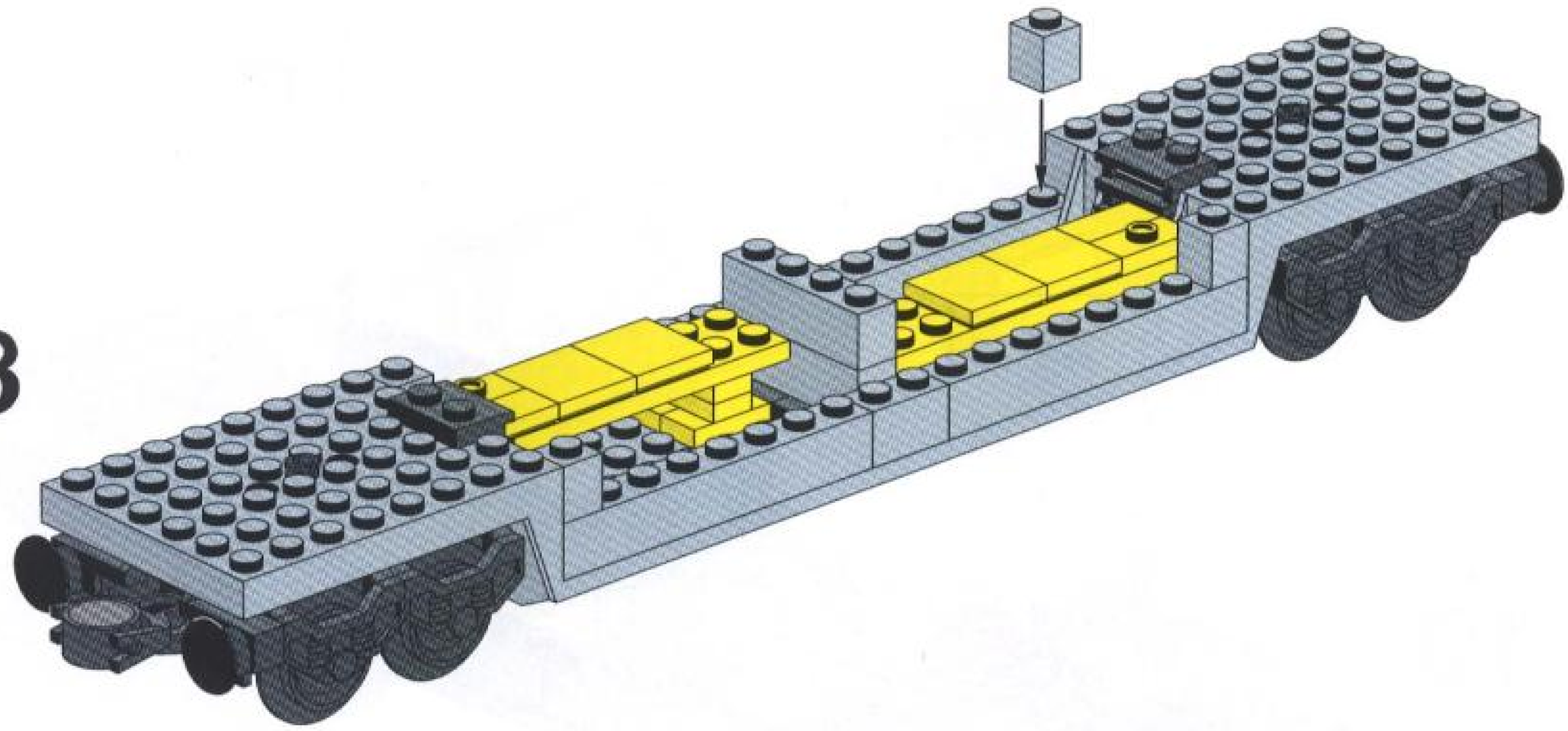

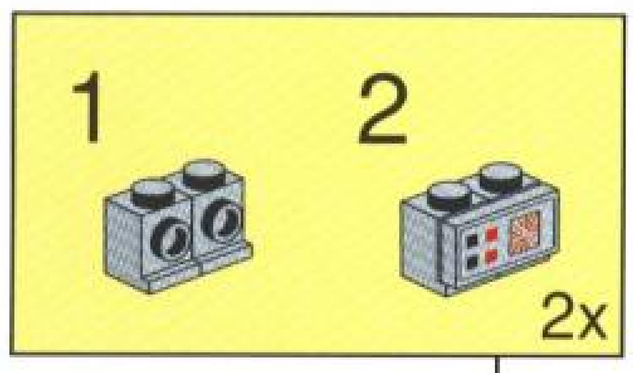

9

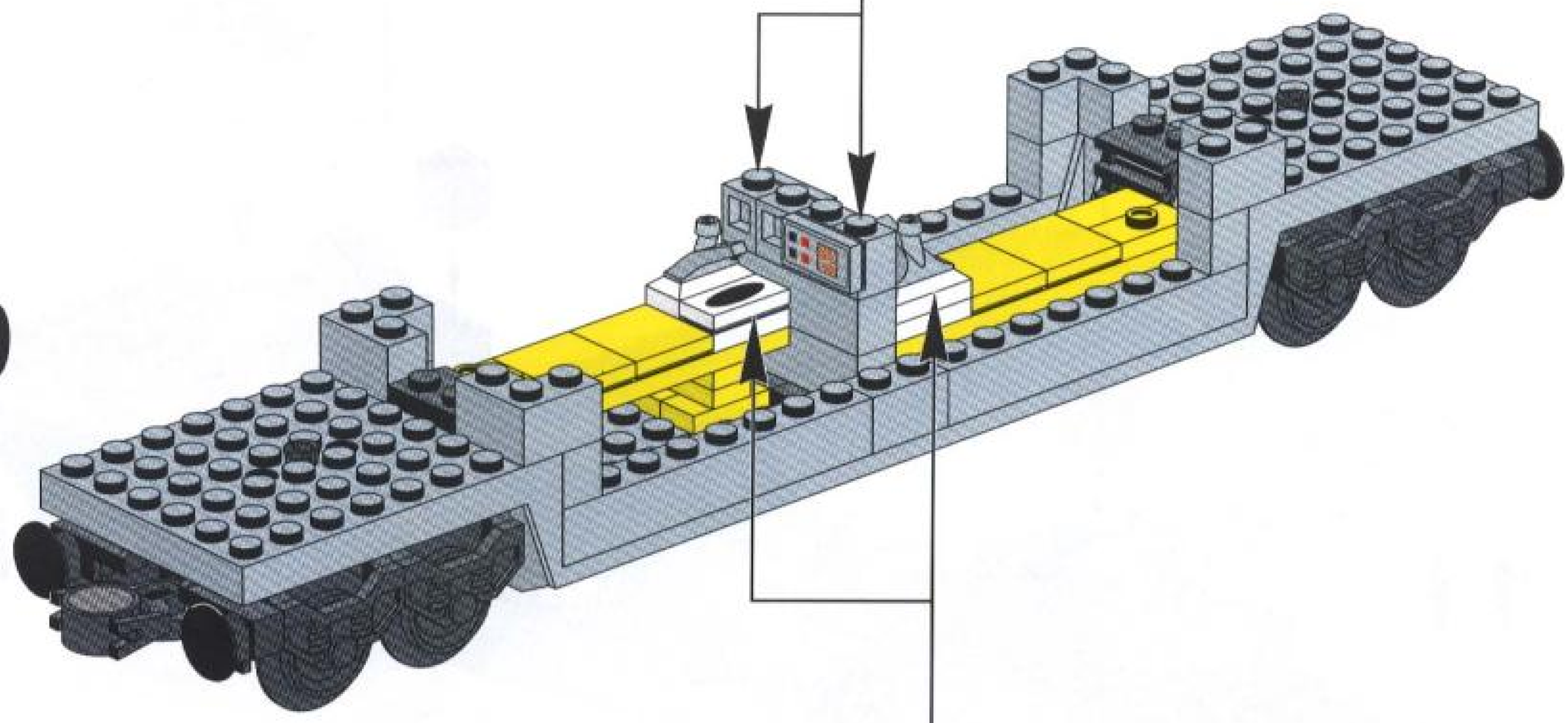

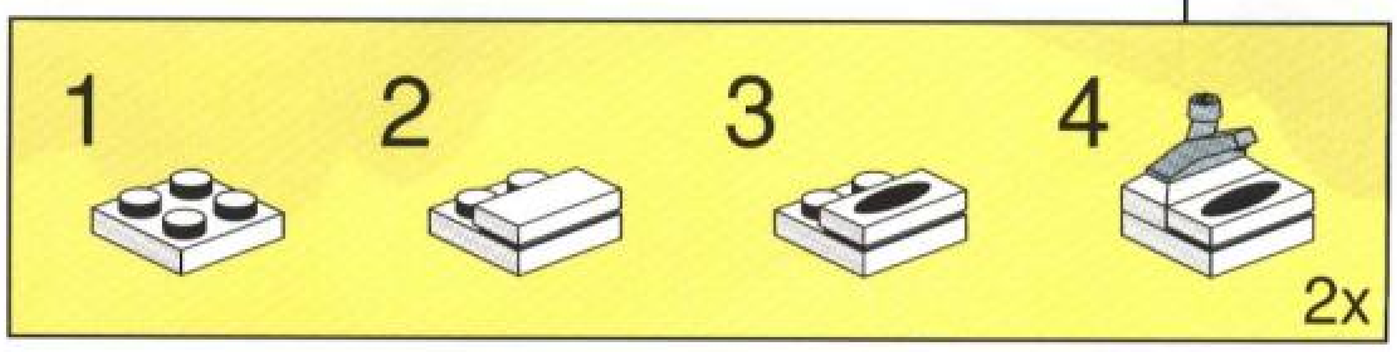

10

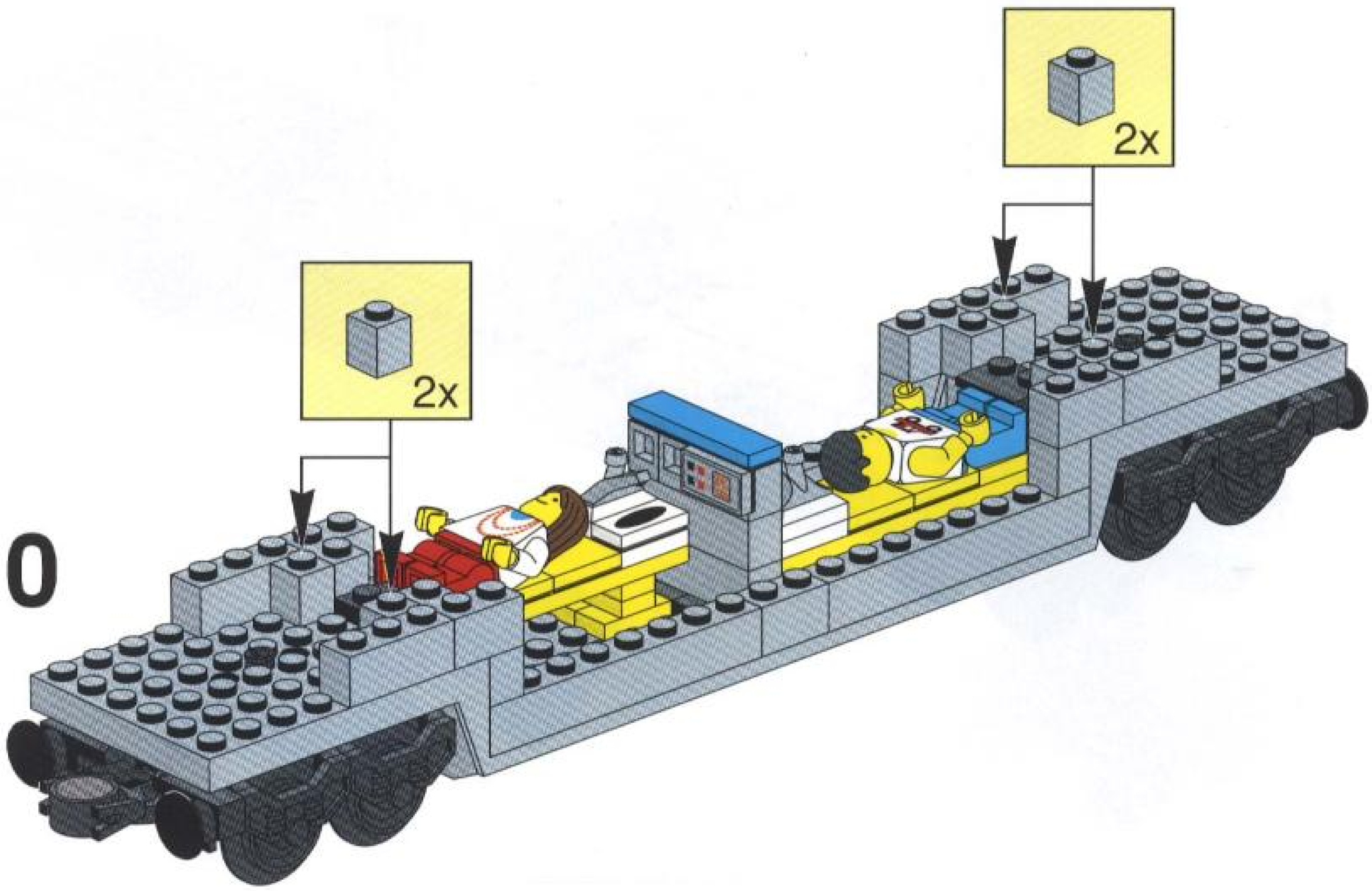

11

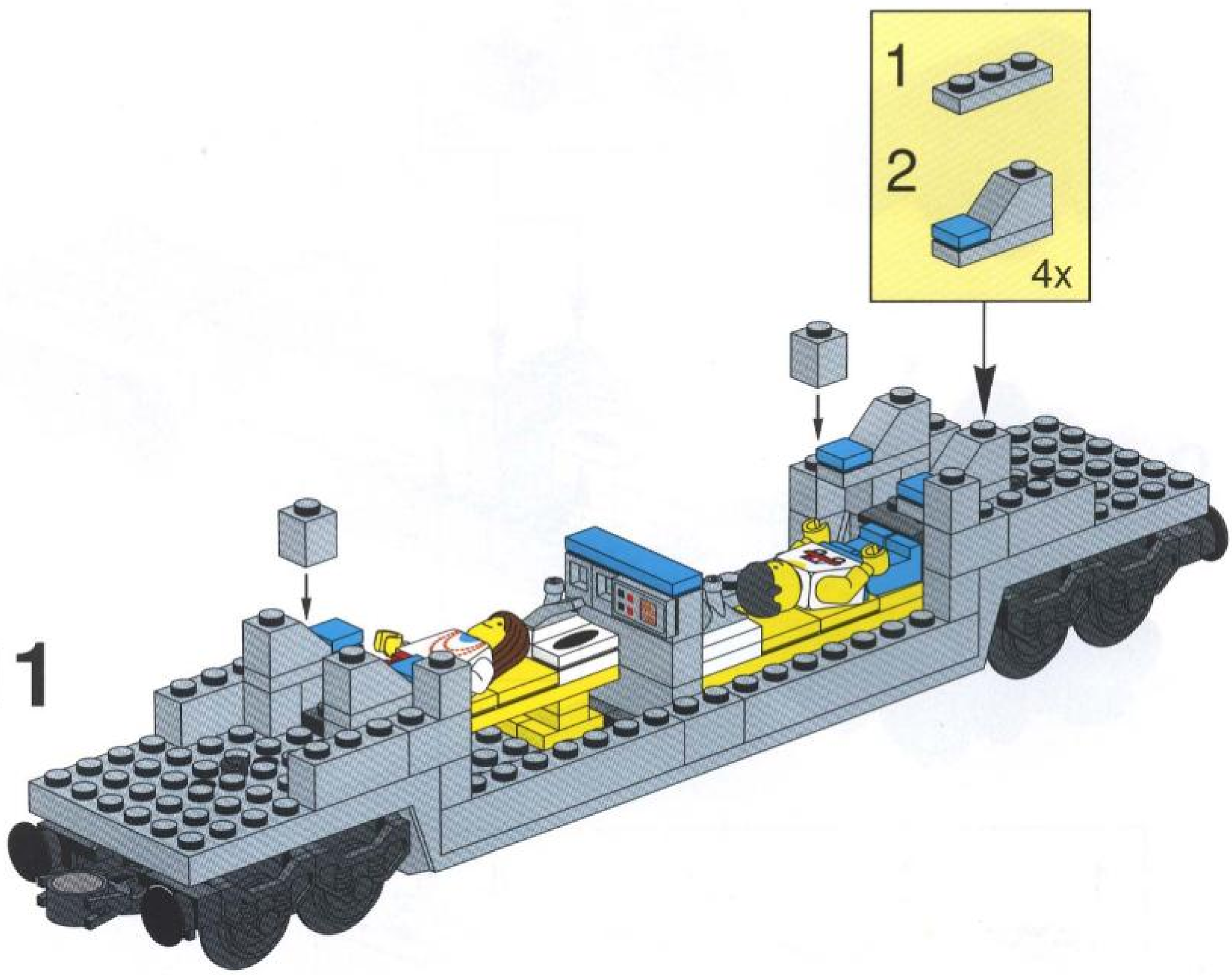

12

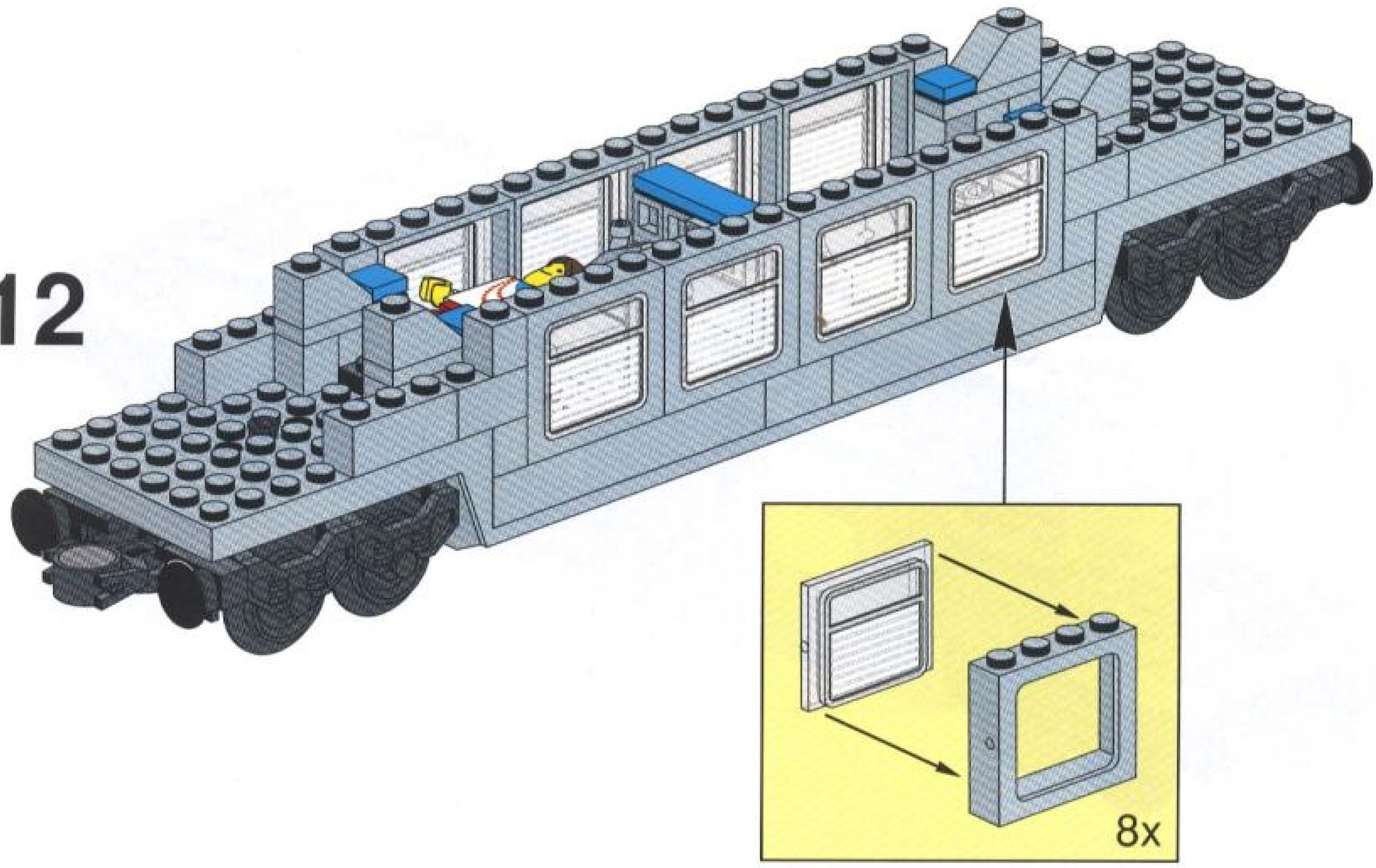

13

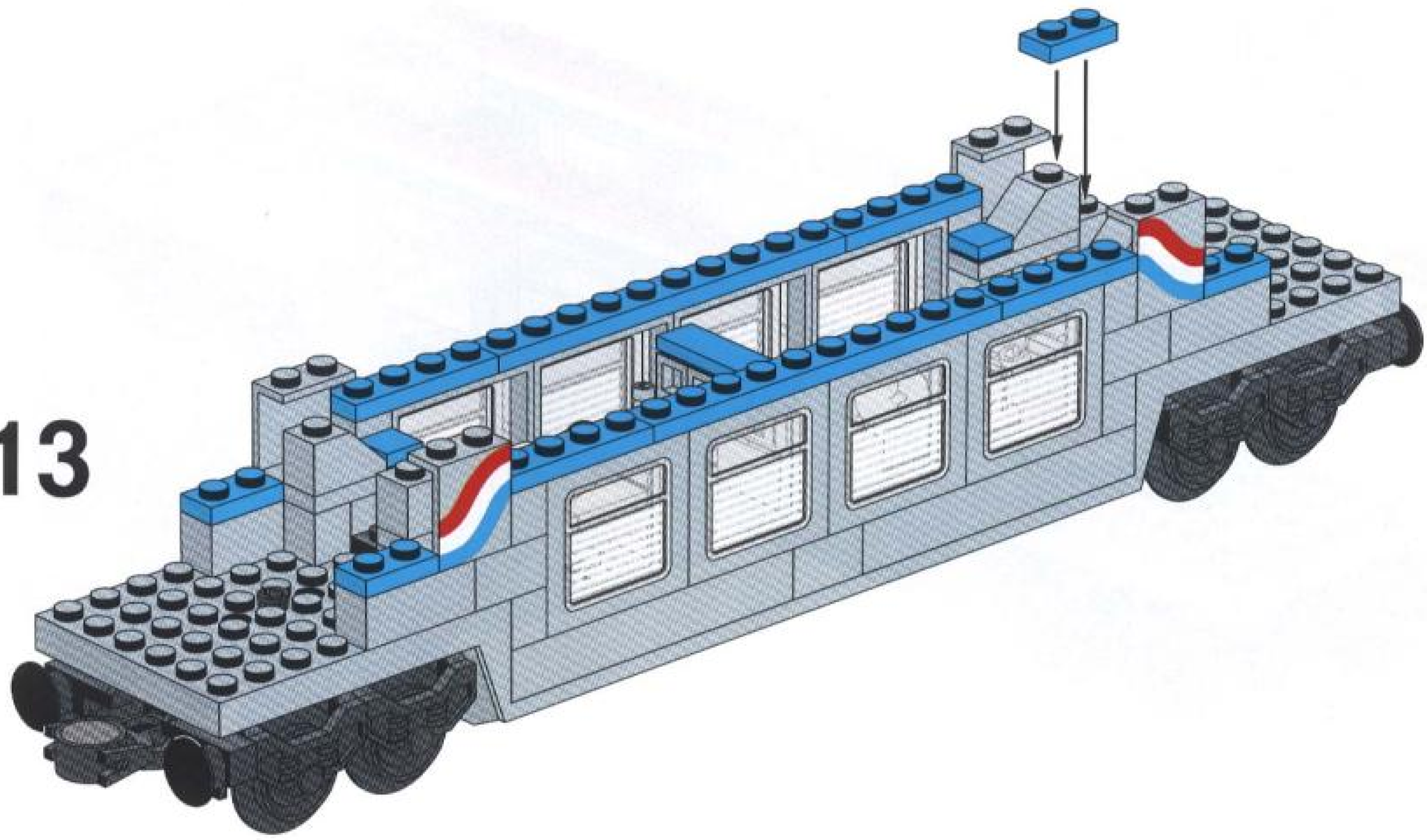

14

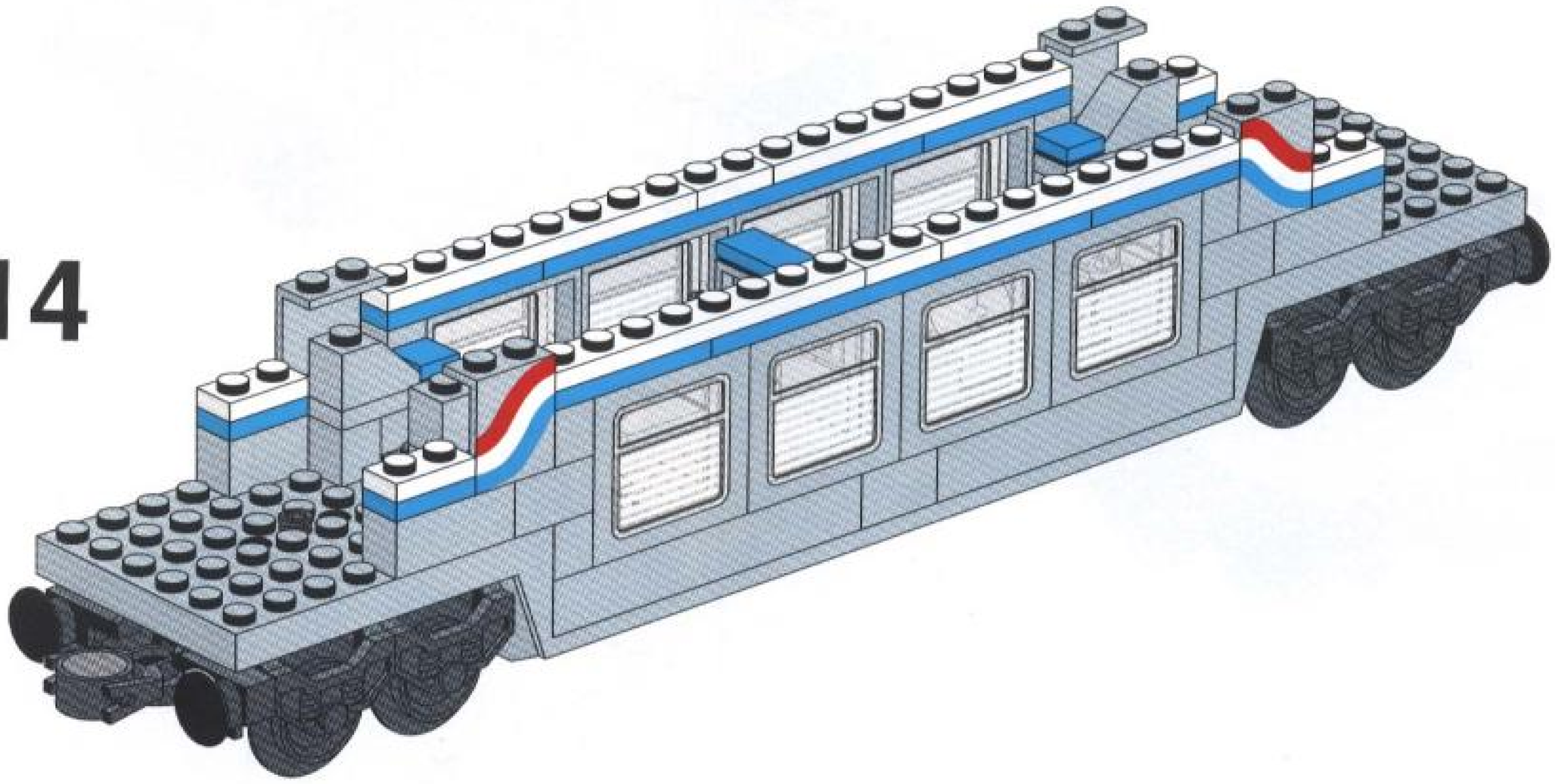

15

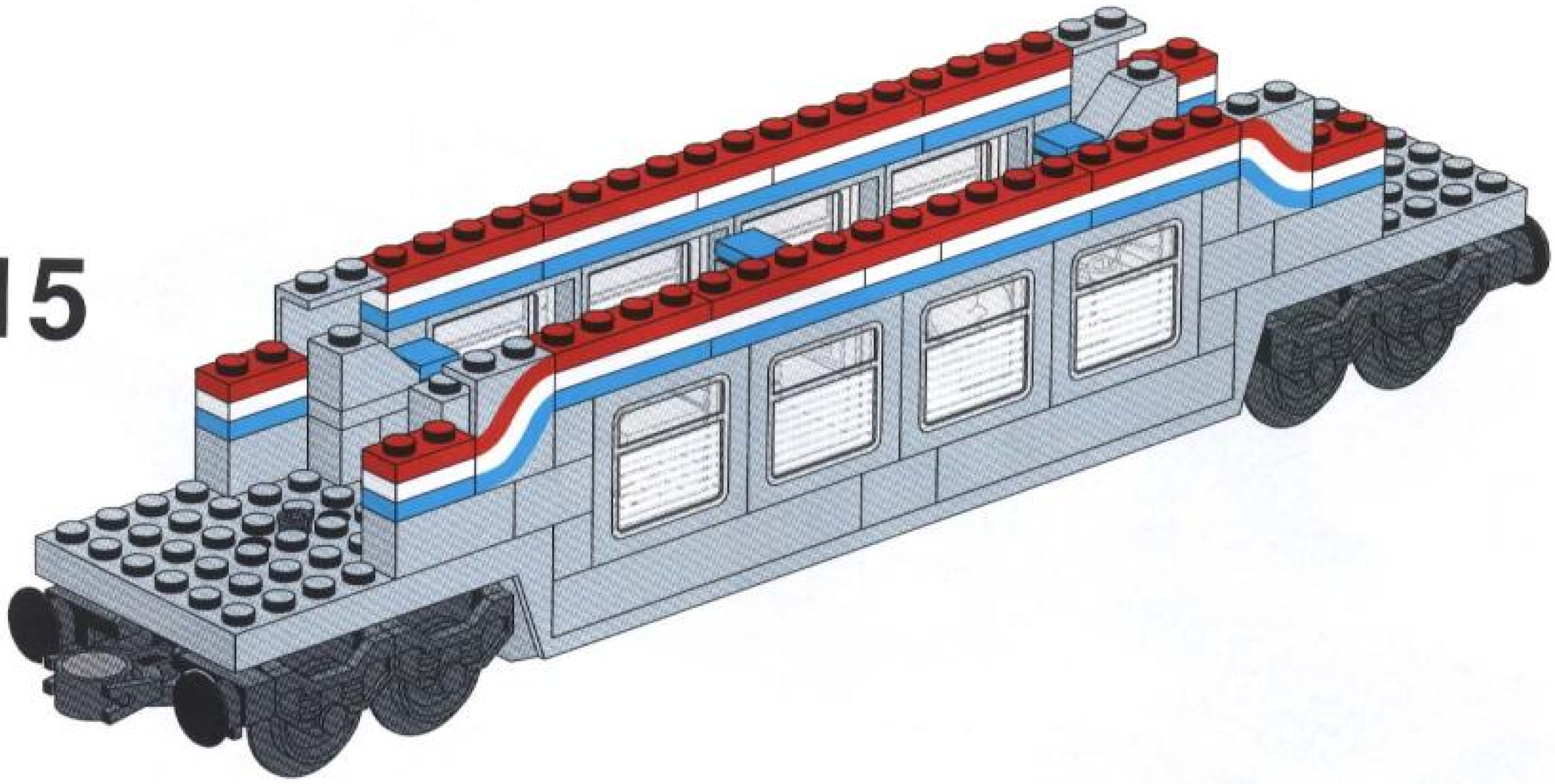

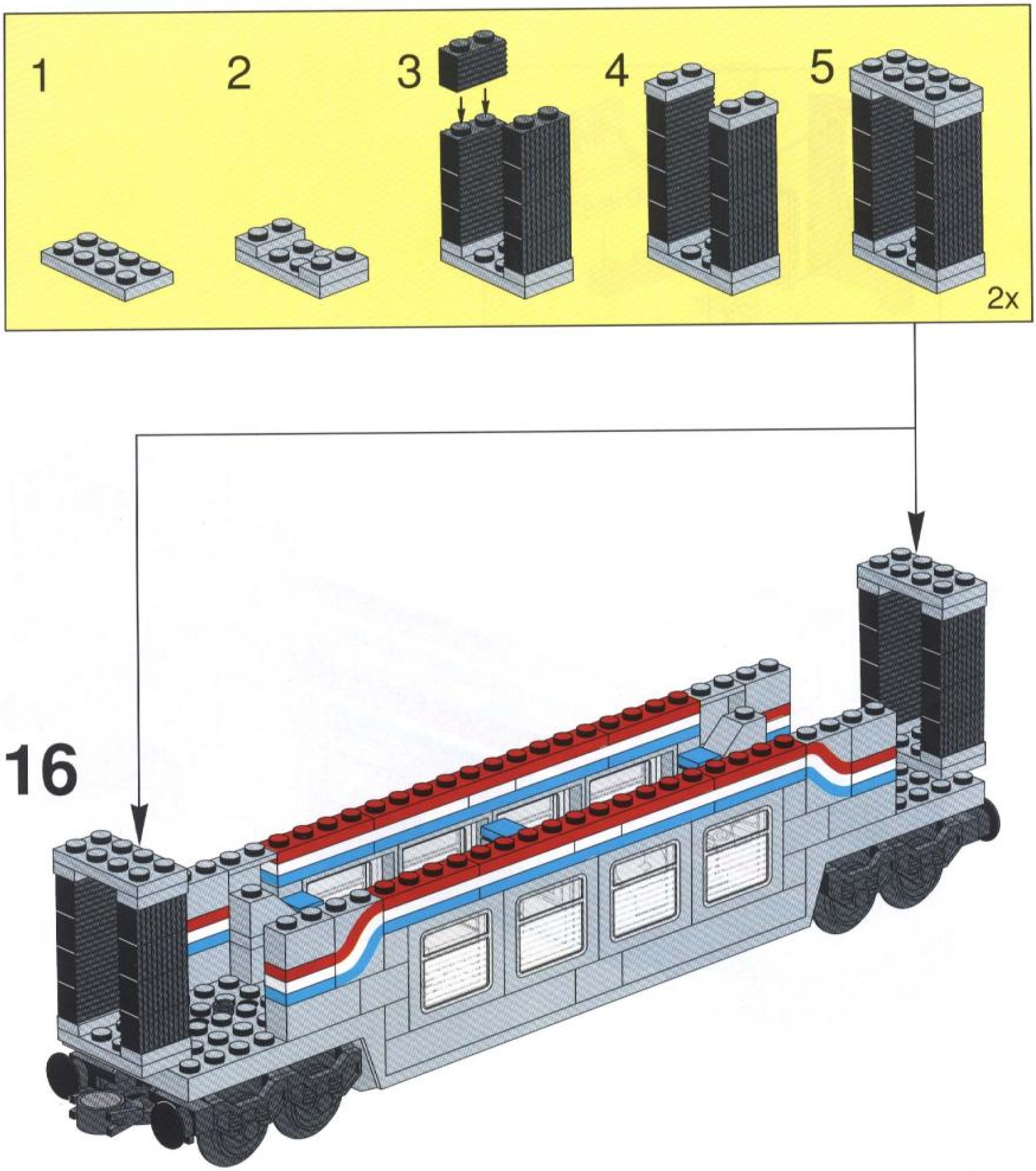
1
2
3
4
5
2x
16

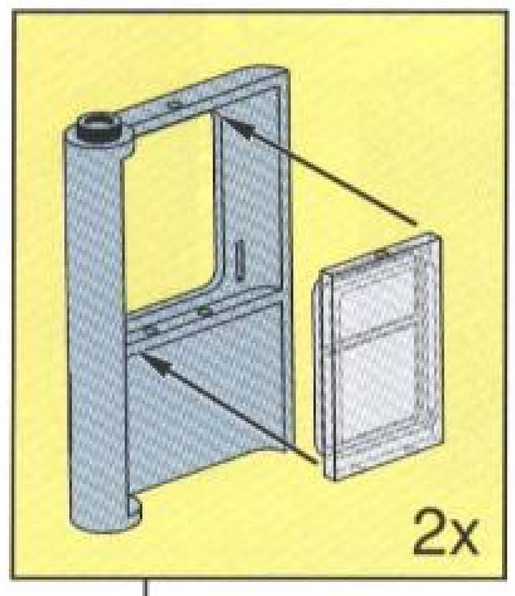

17

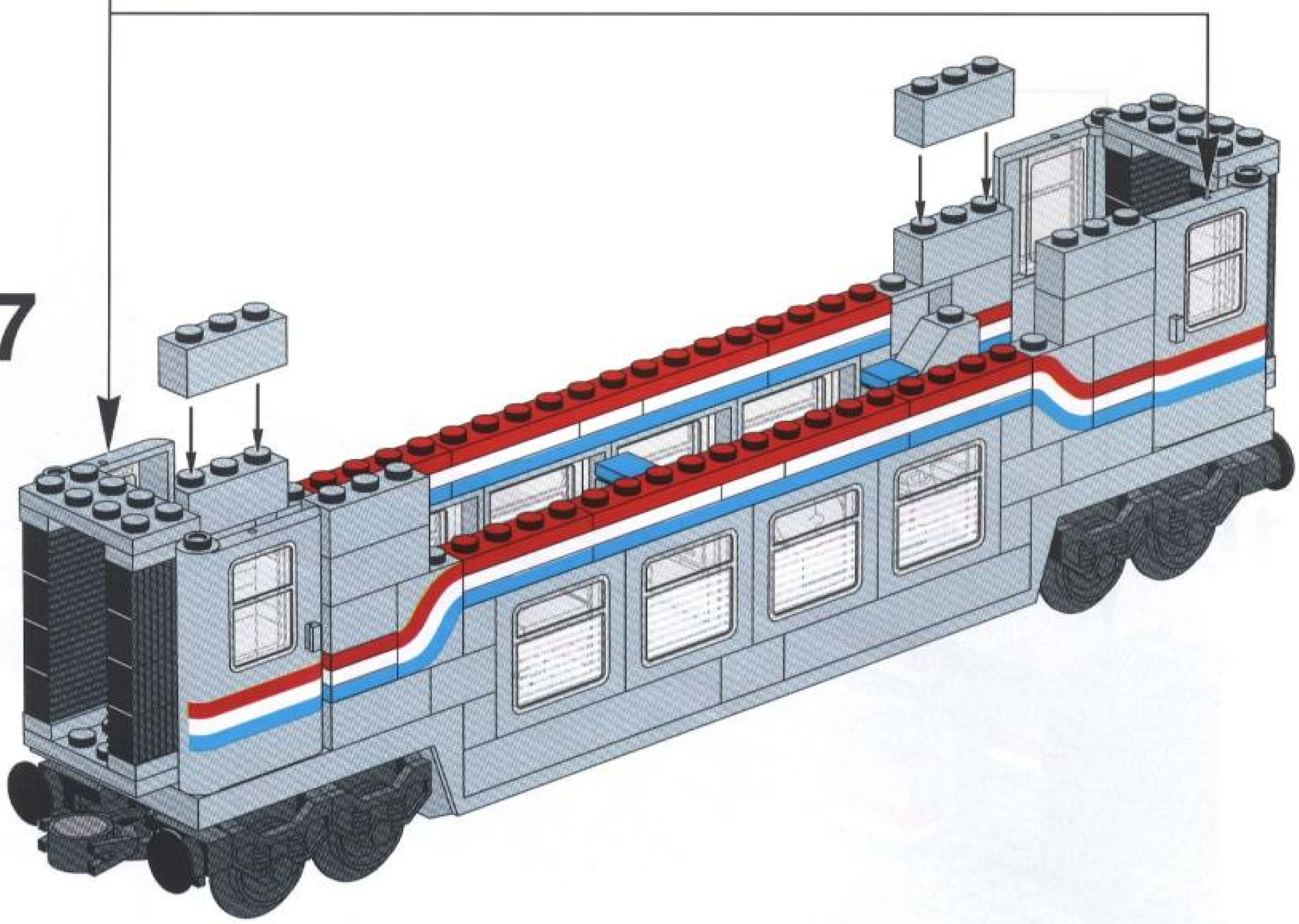

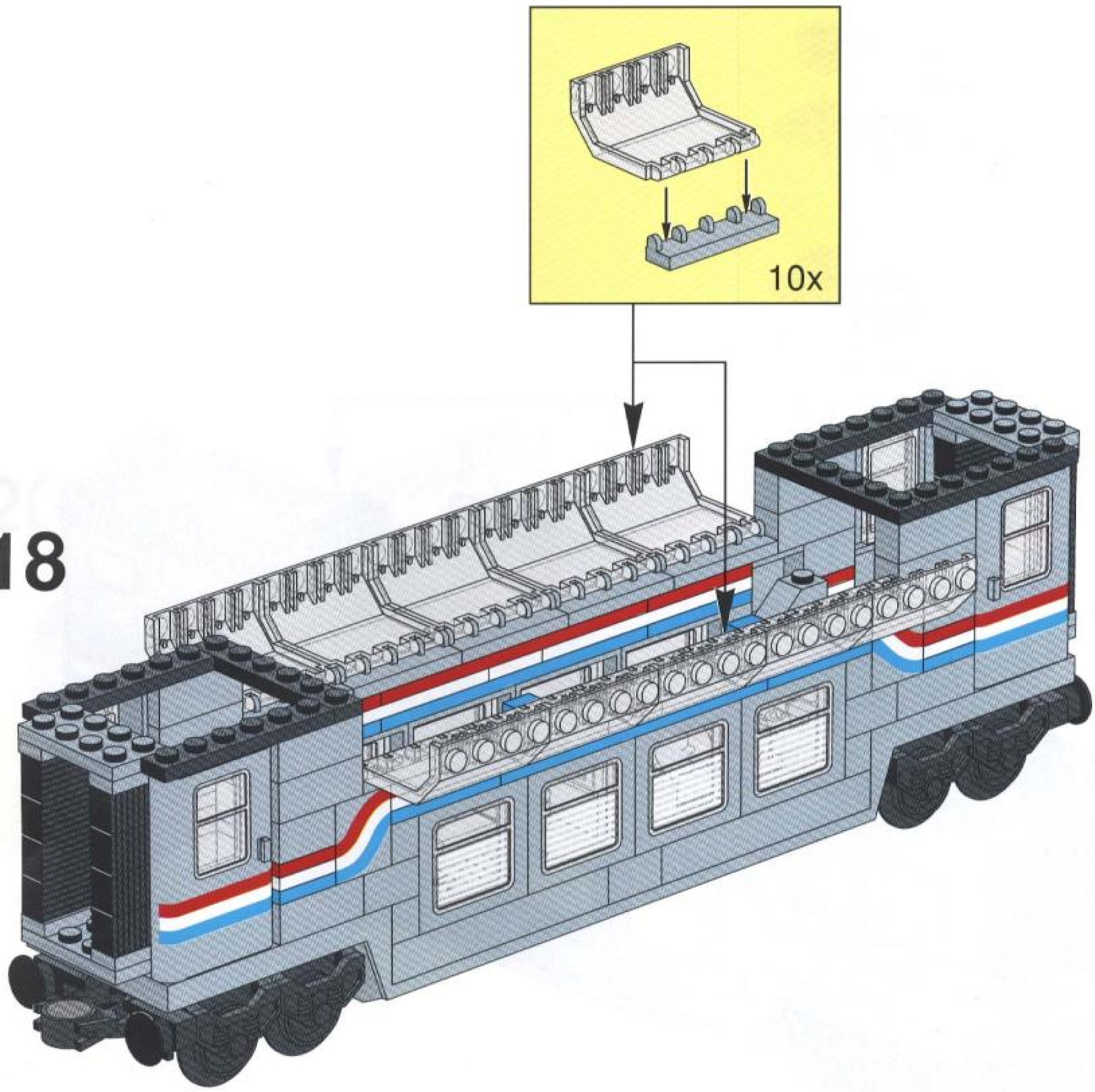
10x
18

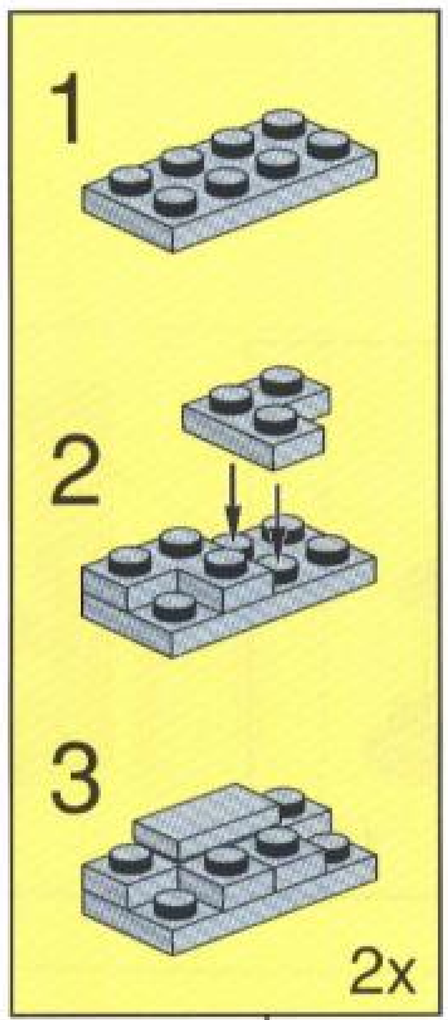

19

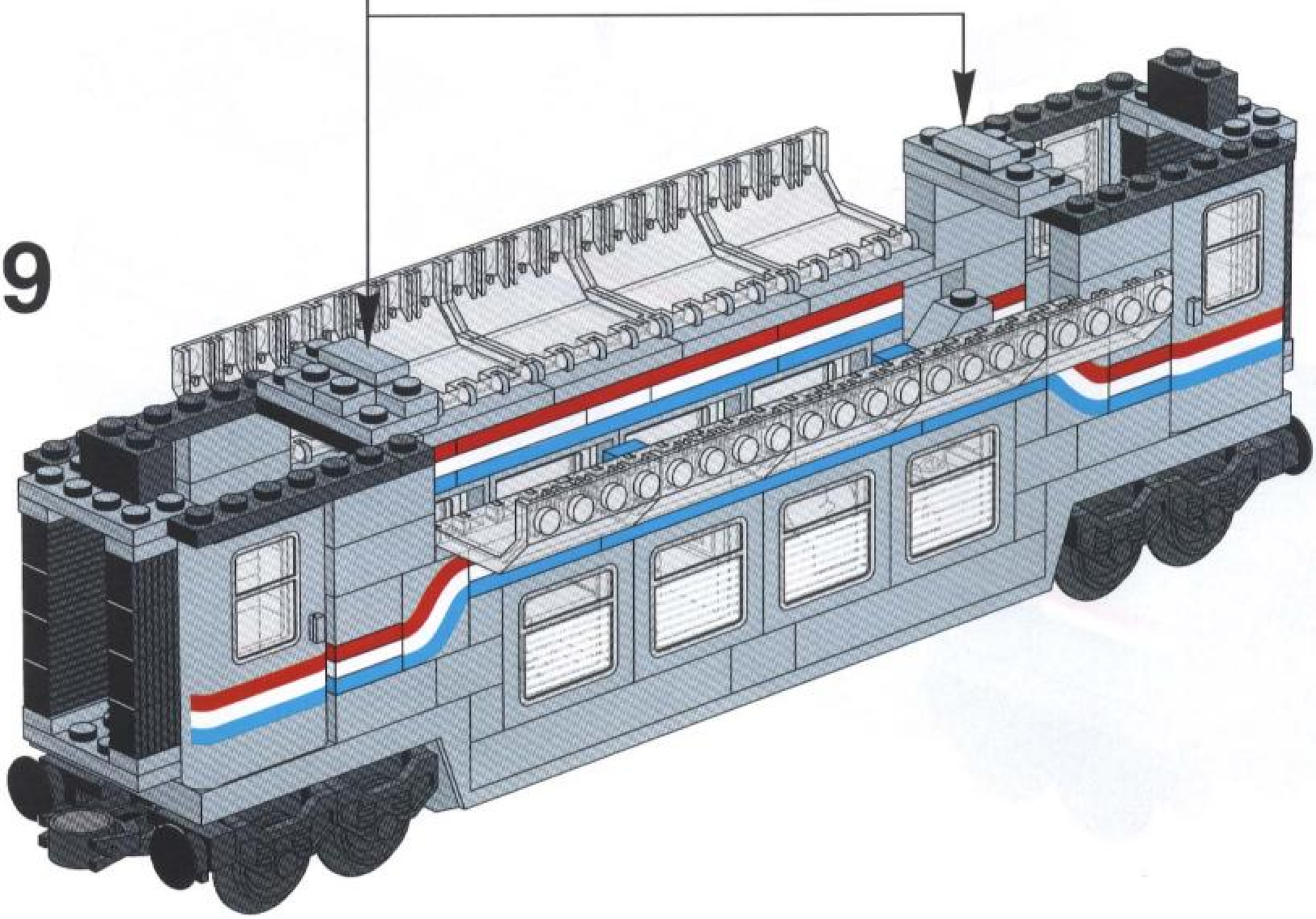

20

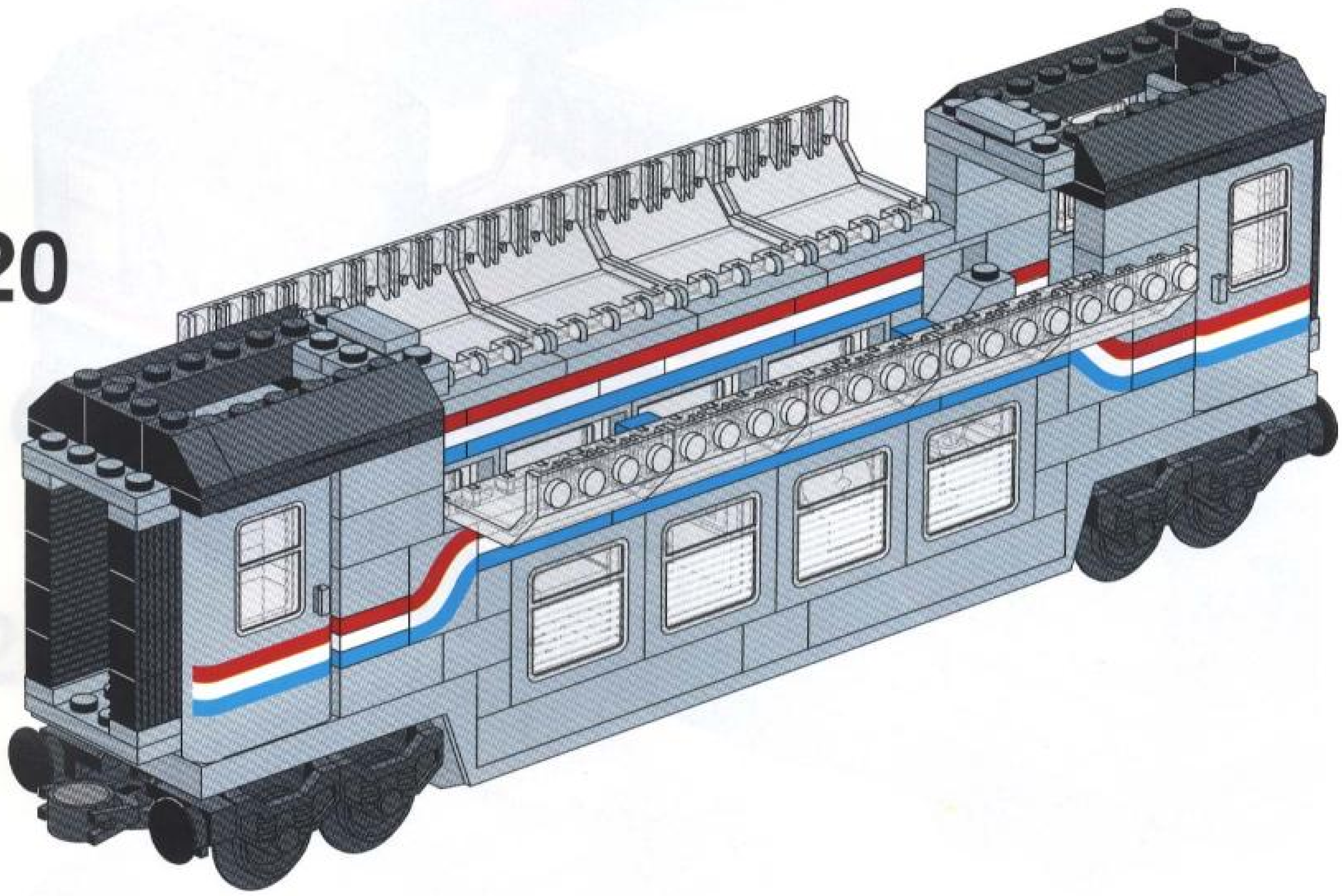

21

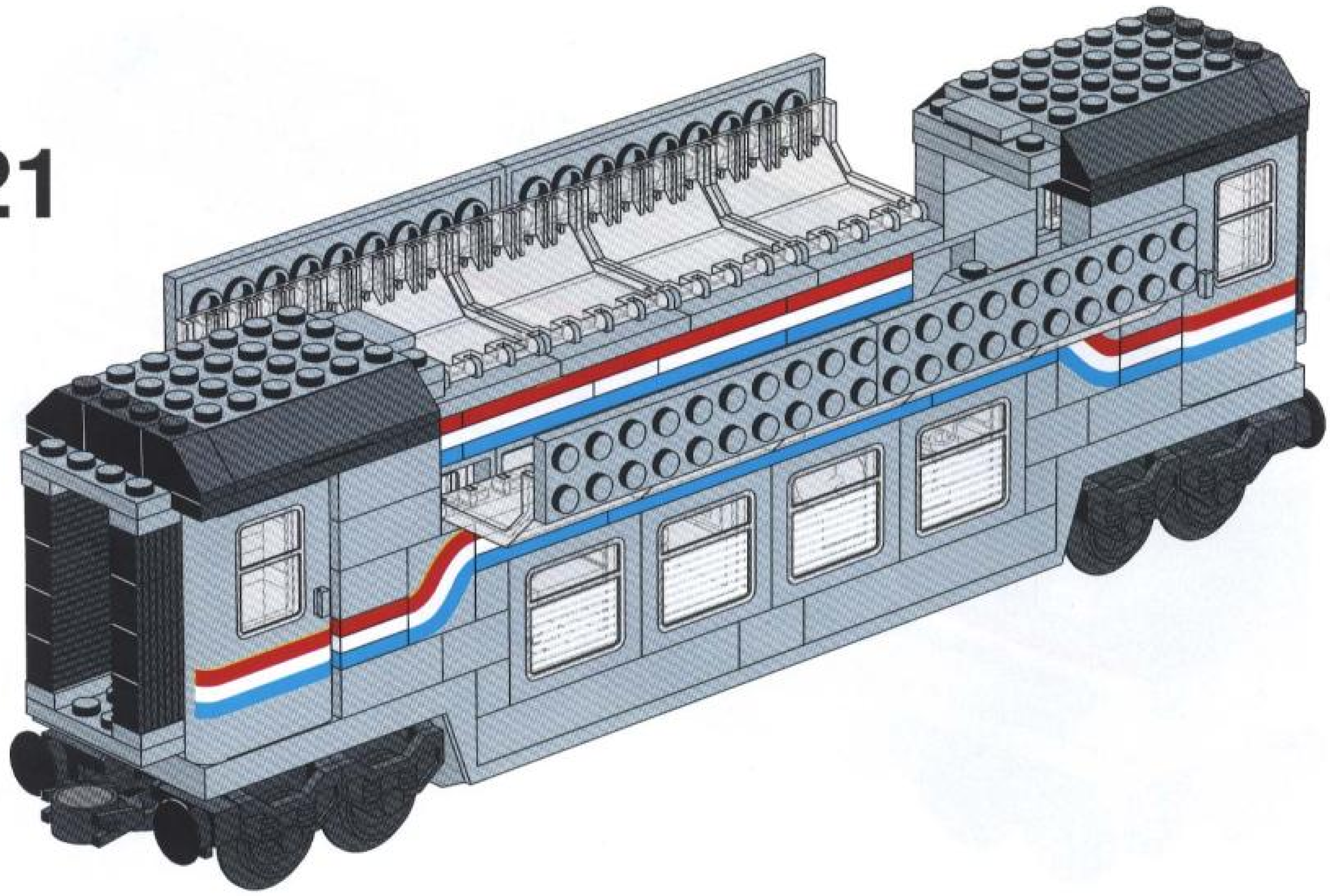

22

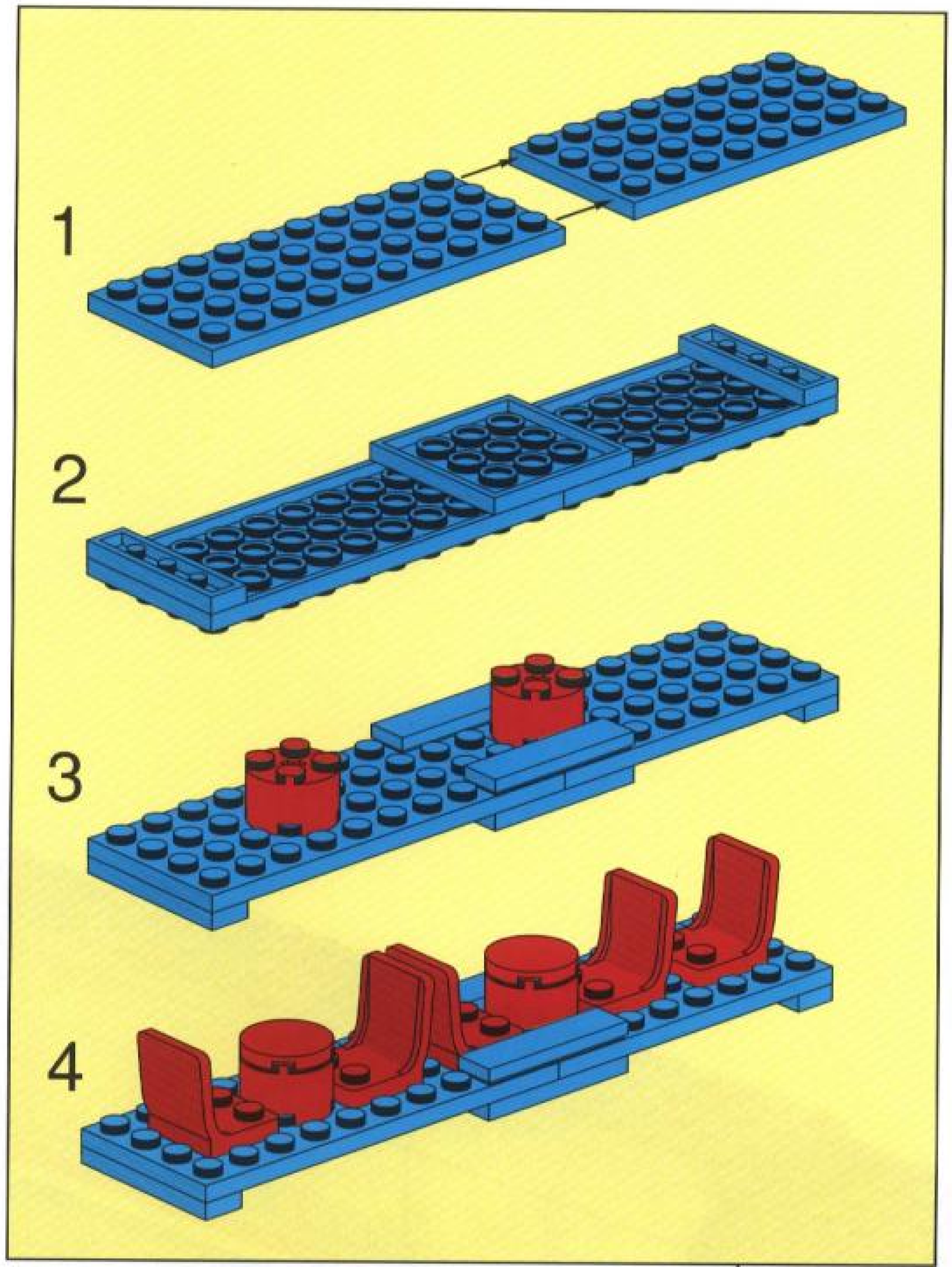

22

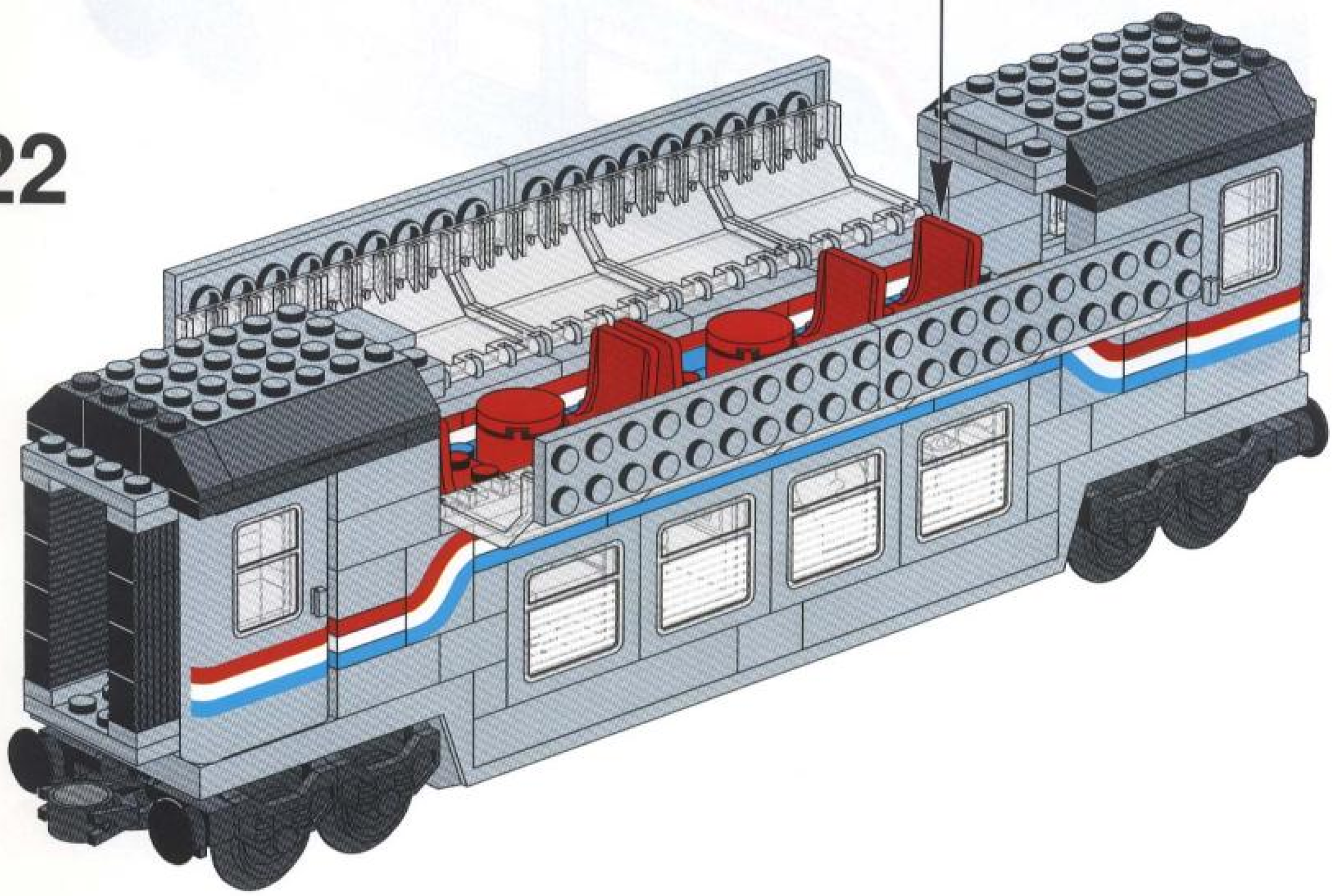

23

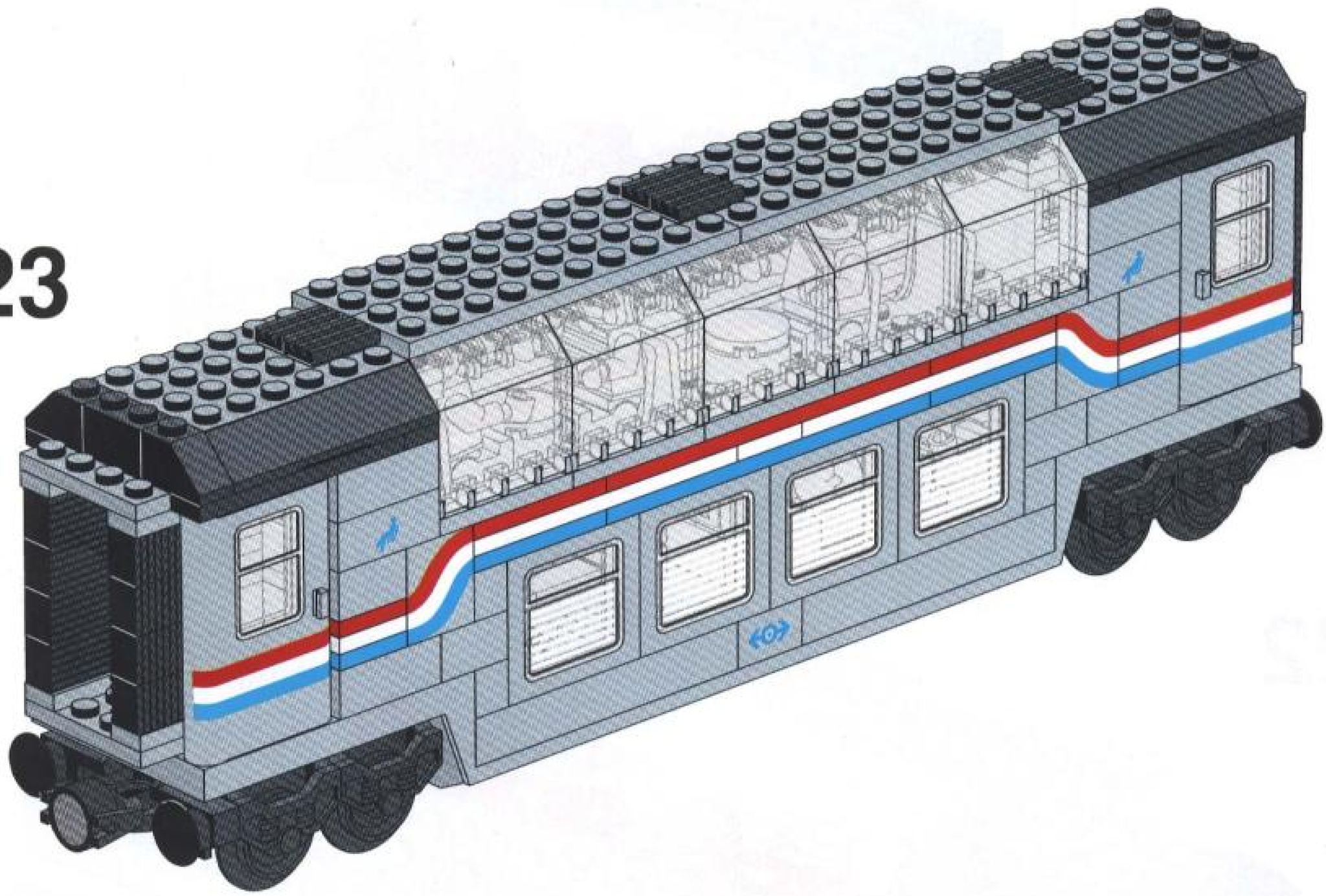

© 1993 LEGO Group

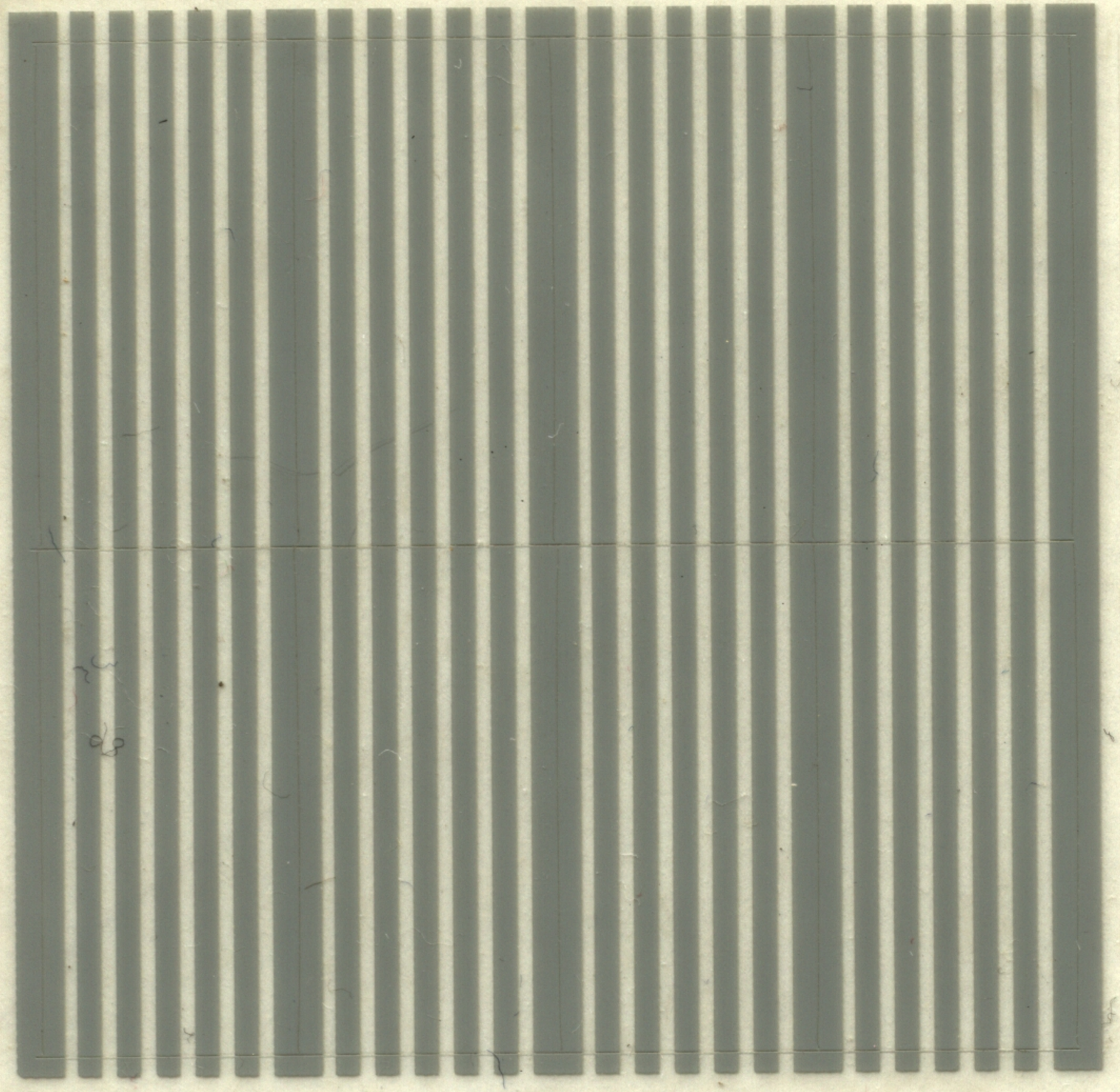

821420